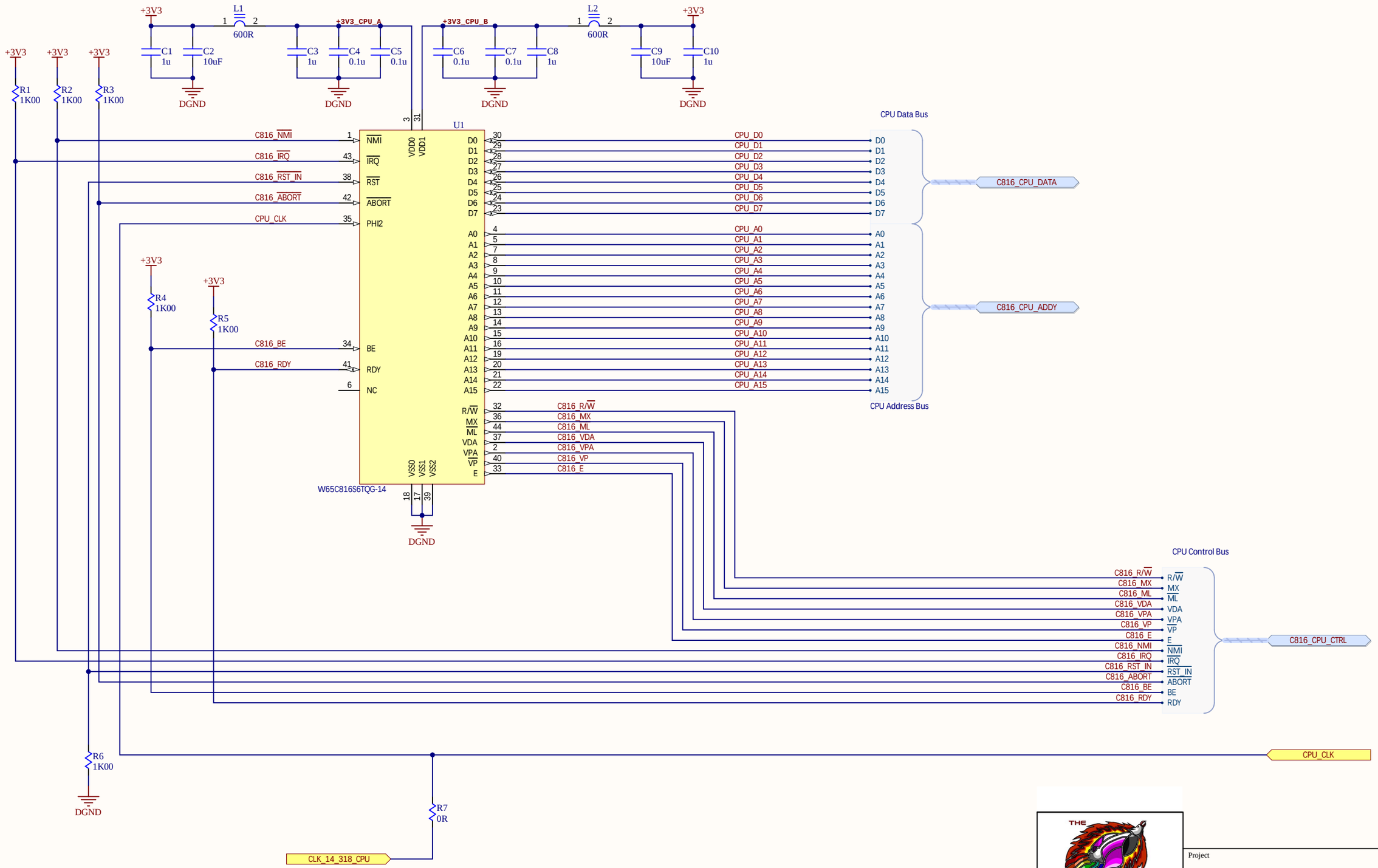

Project			
Schematic	C256F_Schematic_P1.SchDoc		
		Drawn By:	Stefany Allaire
Date: March 2020	Rev: C4B	Checked By:	*
Modified: 19/03/2020	Sheet 1 of 14	Drawing No:	911936919-C4B

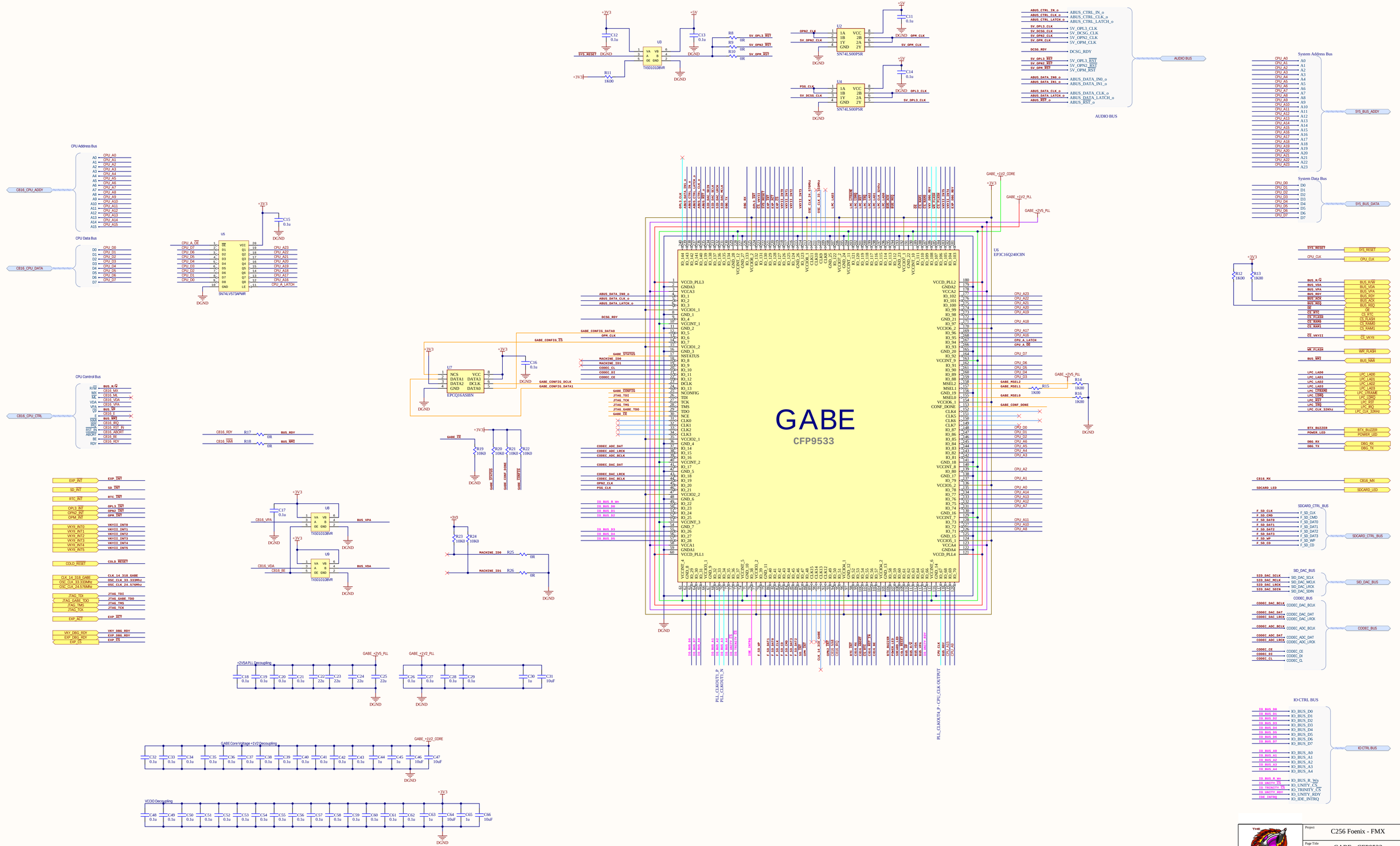
GABE
CFP9533
U6
EP3C16Q240C8N
U2
SN74LS00PSR
U4
SN74LS00PSR
U3
TXS0101DBVR
U5
SN74LV573APWR
U7
EPCQ16ASBN
U8
TXS0101DBVR
U9
TXS0101DBVR
AUDIO BUS
System Address Bus
System Data Bus
CPU Address Bus
CPU Data Bus
CPU Control Bus
SDCARD_CTRL_BUS
SD_DAC_BUS
CODEC_BUS
IO CTRL BUS
+2V5A PLL Decoupling
GABE Core Voltage +1V2 Decoupling
VCCIO Decoupling
DGND

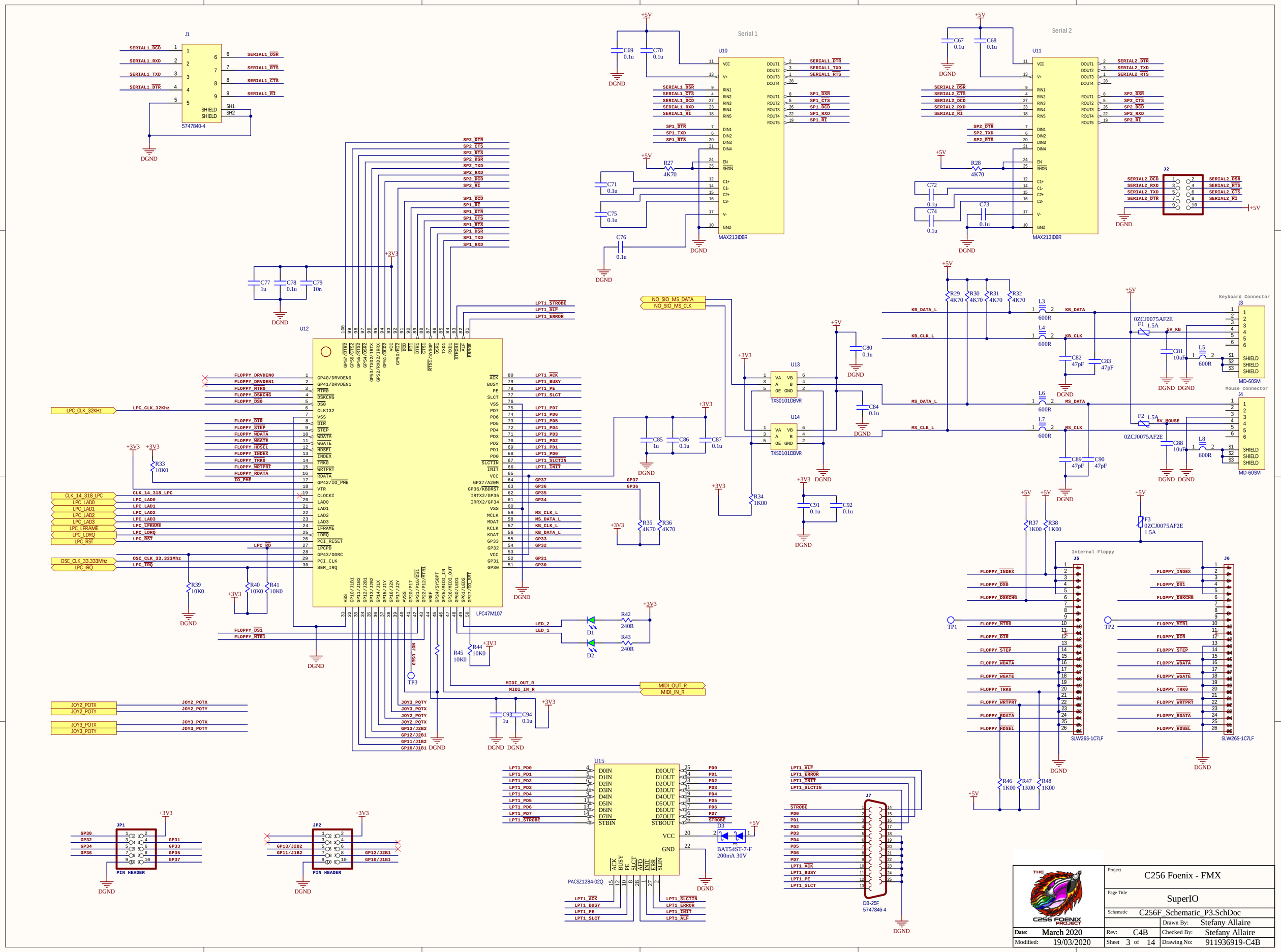
J1
5747840-4
Serial 1
U10
MAX213IDBR
Serial 2
U11
MAX213IDBR
J2
U12
LPC47M107
U13
TXS0101DBVR
U14
TXS0101DBVR
Keyboard Connector
J3
MD-60SM
Mouse Connector
J4
MD-60SM
Internal Floppy
J5
SLW26S-1C7LF
J6
SLW26S-1C7LF
U15
PACSZ1284-02Q
D3
BAT54ST-7-F
200mA 30V
JP1
PIN HEADER
JP2
PIN HEADER
J7
DB-25F
5747846-4
Project
C256 Foenix - FMX
Page Title
SuperIO
Schematic
C256F_Schematic_P3.SchDoc
Drawn By:
Stefany Allaire
Date:
March 2020
Rev:
C4B
Checked By:
Stefany Allaire
Modified:
19/03/2020
Sheet
3 of 14
Drawing No:
911936919-C4B

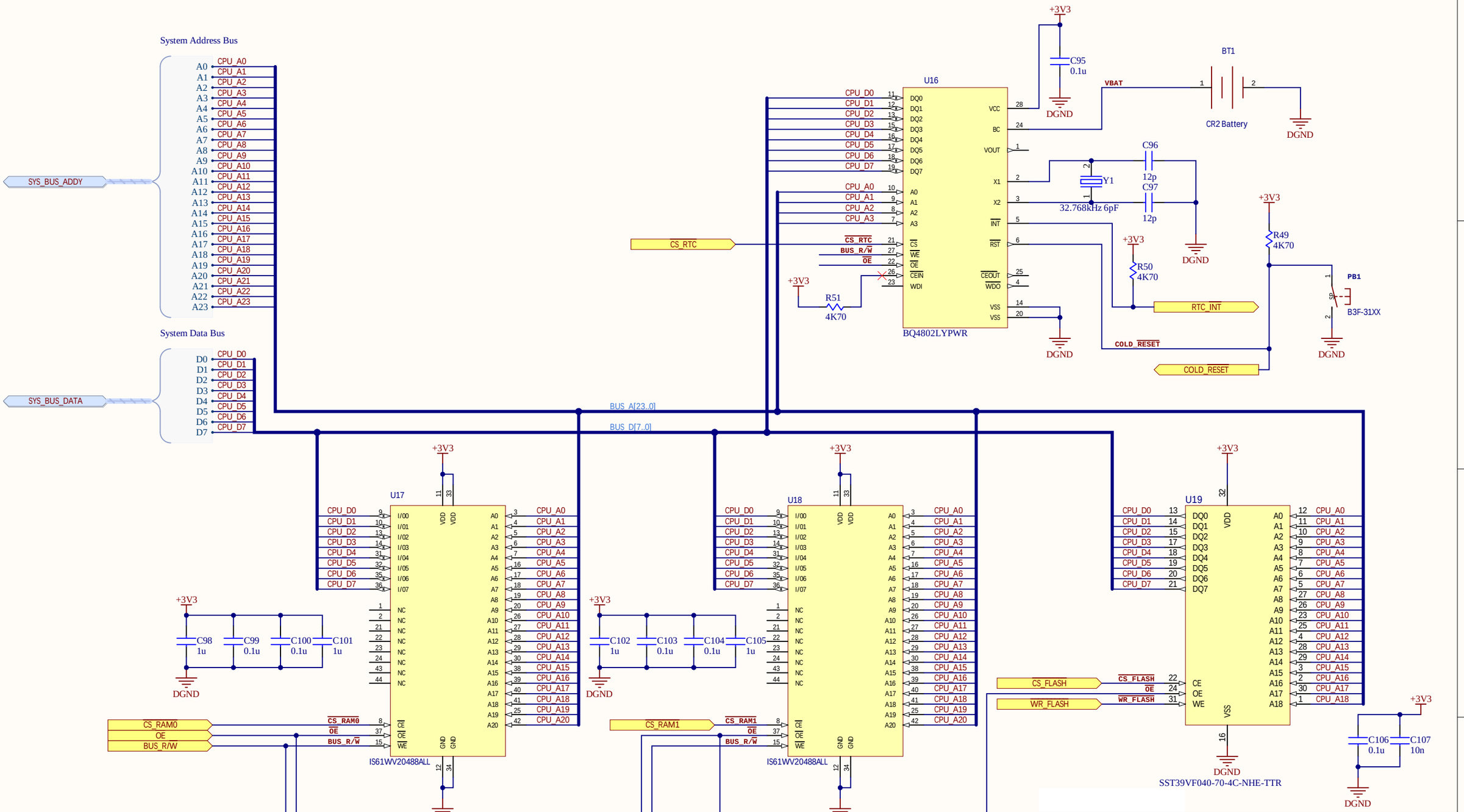

Project	C256 Foenix - FMX
Page Title	MEMORIES & RTC
Schematic	C256F_Schematic_P4.SchDoc
Date: March 2020	Rev: C4B
Modified: 19/03/2020	Sheet 4 of 14
Drawn By:	Stefany Allaire
Checked By:	Stefany Allaire
Drawing No:	911936919-C4B

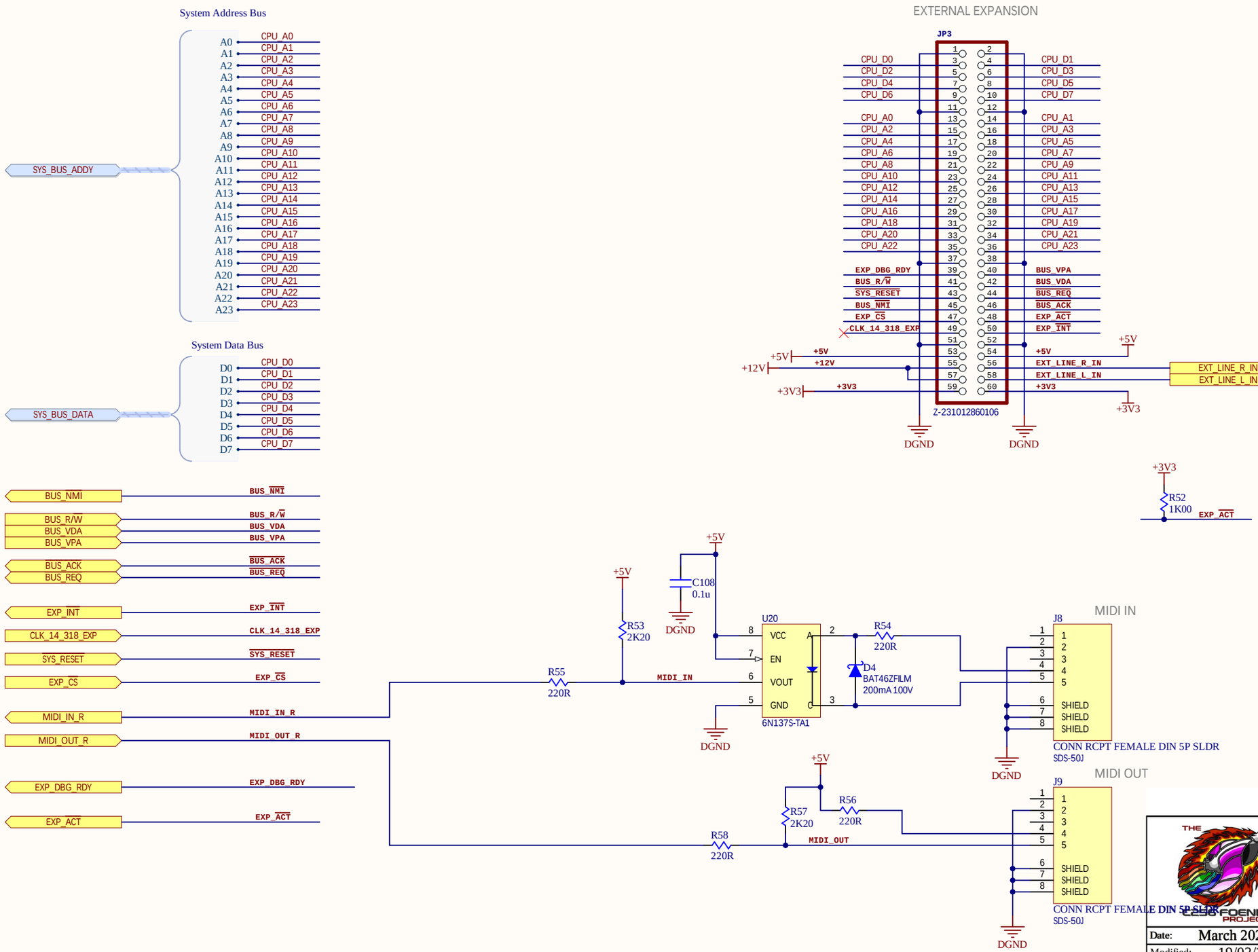

Project	C256 Foenix - FMX
Page Title	EXPANSION BUS / MIDI
Schematic	C256F_Schematic_P5.SchDoc
Date:	March 2020
Modified:	19/03/2020
Rev:	C4B
Sheet	5 of 14
Drawn By:	Stefany Allaire
Checked By:	Stefany Allaire
Drawing No:	911936919-C4B

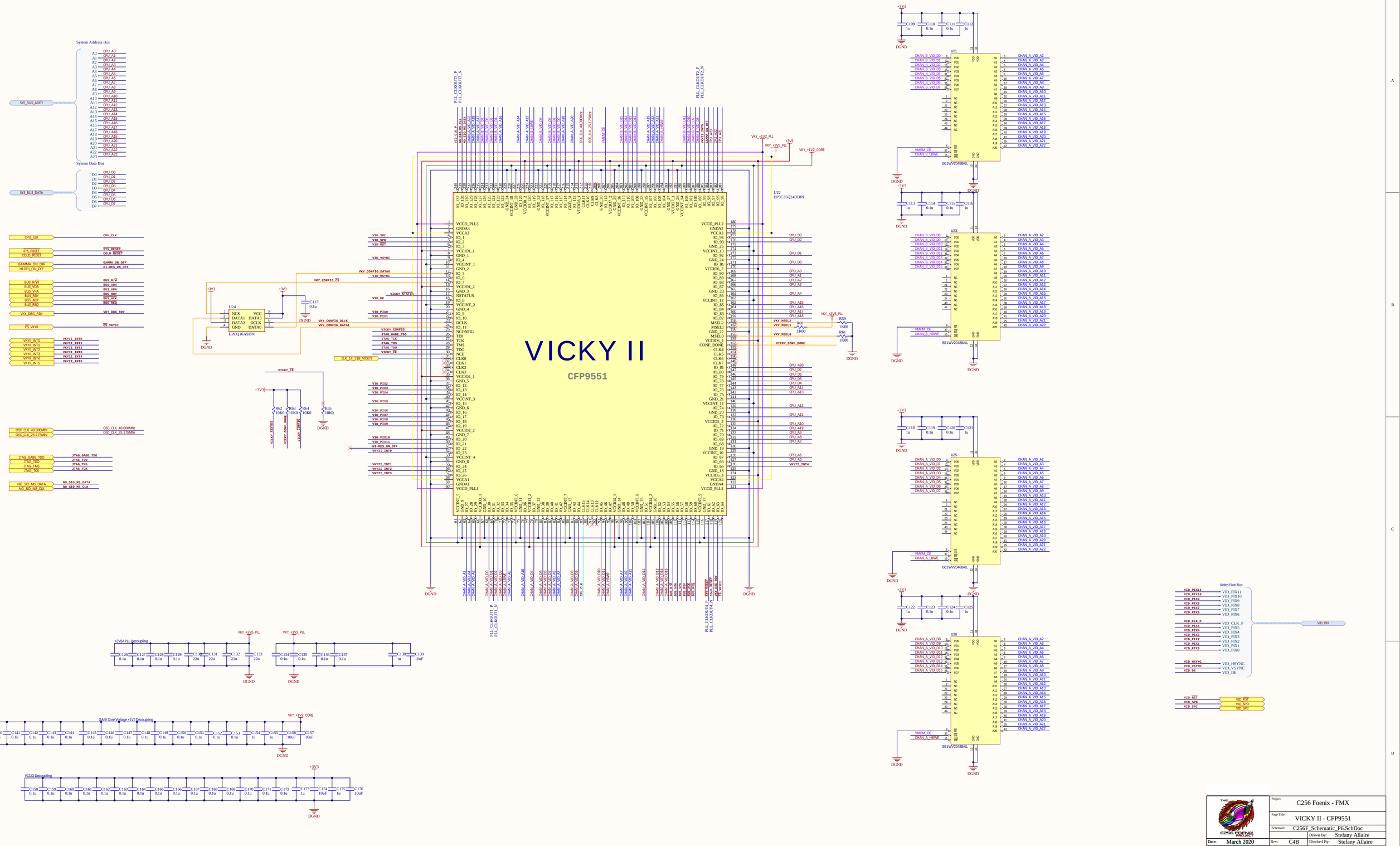
VICKY II
CFP9551
U22
EP3C25Q240C8N
U21
U23
U25
U26
IS61WV20488ALL
U24
EPCQ16ASI8N
System Address Bus
System Data Bus
SYS_BUS_ADDY
SYS_BUS_DATA
CPU_CLK
SYS_RESET
COLD_RESET
GAMMA_ON_OFF
HI-RES_ON_OFF
BUS_R/W
BUS_VDA
BUS_VPA
BUS_RDY
BUS_ACK
BUS_REQ
VKY_DBG_RDY
CS_VKYII
VKYII_INT0
VKYII_INT1
VKYII_INT2
VKYII_INT3
VKYII_INT4
VKYII_INT5
OSC_CLK_40.000MHz
OSC_CLK_25.175MHz
JTAG_GABE_TDO
JTAG_TDO
JTAG_TMS
JTAG_TCK
NO_SIO_MS_DATA
NO_SIO_MS_CLK
+2V5A PLL Decoupling
GABE Core Voltage +1V2 Decoupling
VCCIO Decoupling
Video Pixel Bus
VID_PIX
VICKY_STATUS
VICKY_COMM_ERROR
VICKY_CONFIG
VICKY_CE
PLL_CLKOUT1_P
PLL_CLKOUT1_N
PLL_CLKOUT2_P
PLL_CLKOUT2_N
VKY_+1V2_PLL
VKY_+2V5_PLL
VKY_+1V2_CORE
VKY_CONFIG_DATA0
VKY_CONFIG_DCLK
VKY_CONFIG_DATA1
VICKY_CONFIG
CLK_14_318_VICKYII
VICKY_CONF_DONE
VKYII_INT4
DGND
+3V3

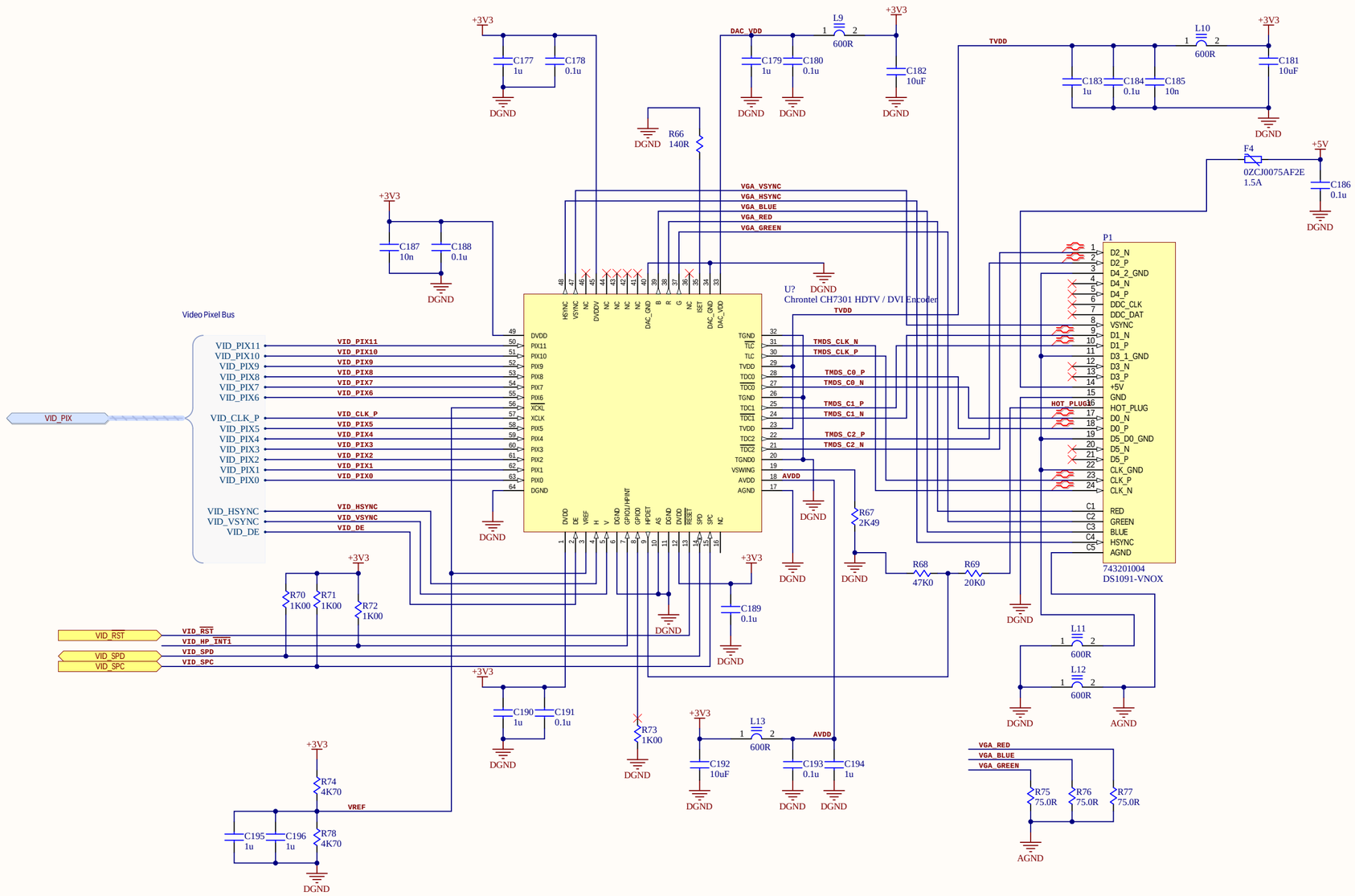

Project	C256 Foenix - FMX		
Page Title	VIDEO DAC		
Schematic	C256F_Schematic_P7.SchDoc		
		Drawn By:	Stefany Allaire
Date: March 2020	Rev: C4B	Checked By:	Stefany Allaire
Modified: 19/03/2020	Sheet 7 of 14	Drawing No:	911936919-C4B

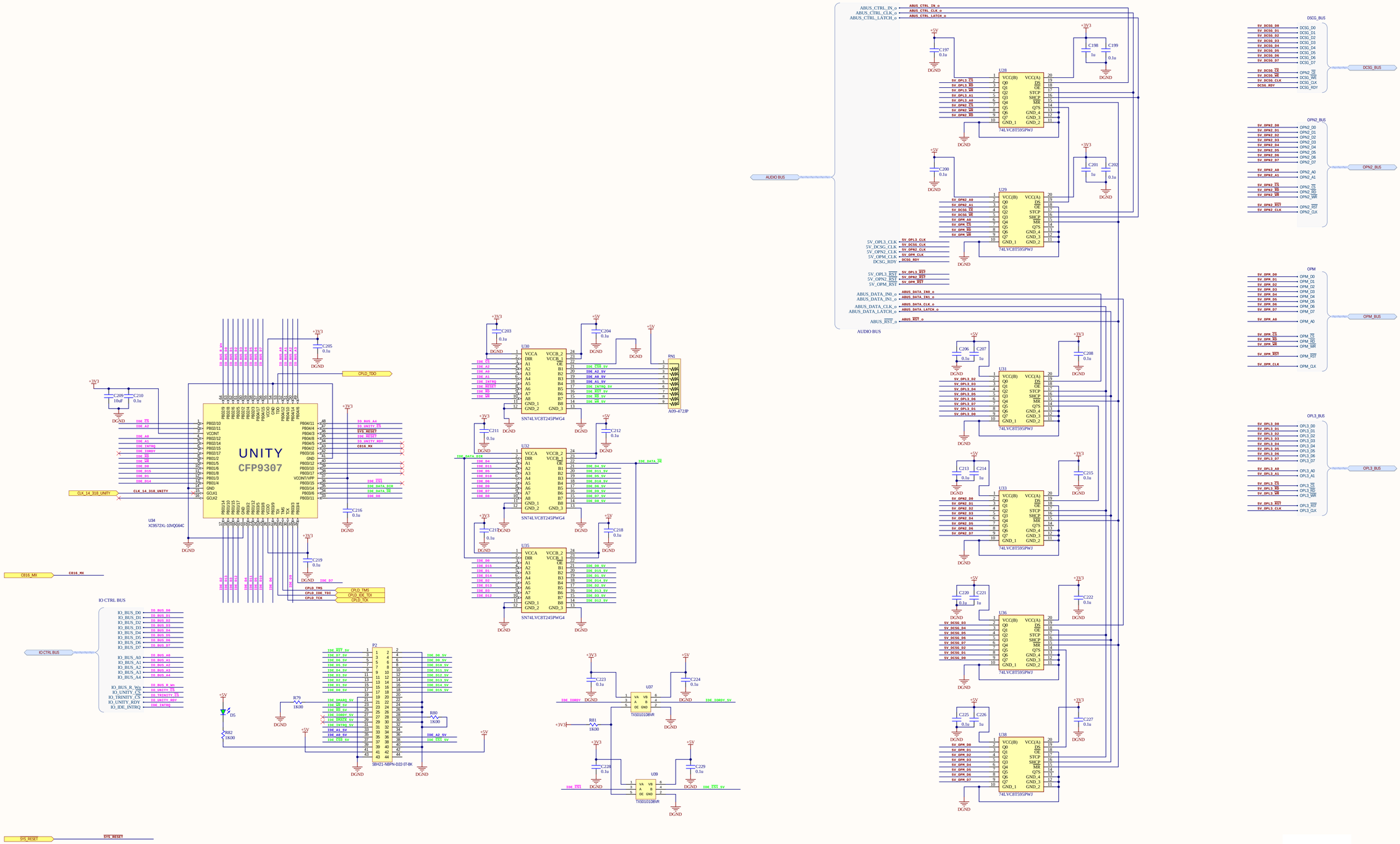

Project	C256 Foenix - FMX
Page Title	GABE INTERFACES
Schematic:	C256F_Schematic_P8.SchDoc
Drawn By:	Stefany Allaire
Date: March 2020	Rev: C4B
Modified: 19/03/2020	Checked By: Stefany Allaire
Sheet 8 of 14	Drawing No: 911936919-C4B

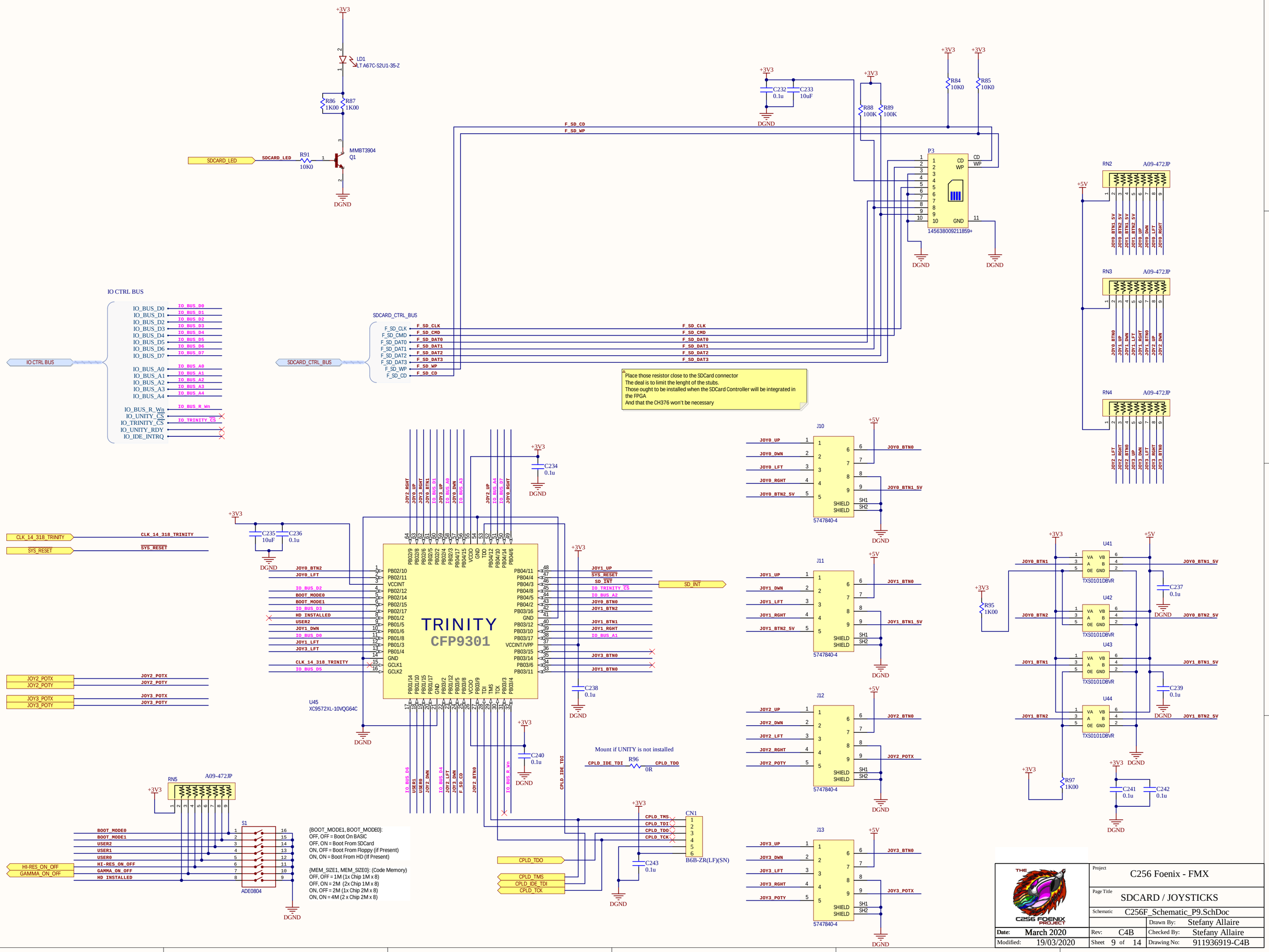
SDCARD_LED
LD1
ILT A67C-S2U1-35-Z
R86 1K00
R87 1K00
R91 10K0
MMBT3904
Q1
DGND
+3V3
C232 0.1u
C233 10uF
R88 100K
R89 100K
R84 10K0
R85 10K0
F_SD_CD
F_SD_WP
P3
CD
WP
GND
145638009211859+
RN2
A09-472JP
+5V
JOY0_BTN1_5V
JOY0_BTN2_5V
JOY1_BTN1_5V
JOY1_BTN2_5V
JOY0_UP
JOY0_DWN
JOY0_LFT
JOY0_RGHT
RN3
JOY0_BTN0
JOY1_UP
JOY1_DWN
JOY1_LFT
JOY1_RGHT
JOY1_BTN0
RN4
JOY2_LFT
JOY2_RGHT
JOY2_BTN0
JOY3_UP
JOY3_DWN
JOY3_LFT
JOY3_RGHT
JOY3_BTN0
IO CTRL BUS
IO_BUS_D0
IO_BUS_D1
IO_BUS_D2
IO_BUS_D3
IO_BUS_D4
IO_BUS_D5
IO_BUS_D6
IO_BUS_D7
IO_BUS_A0
IO_BUS_A1
IO_BUS_A2
IO_BUS_A3
IO_BUS_A4
IO_BUS_R_Wn
IO_UNITY_CS
IO_TRINITY_CS
IO_UNITY_RDY
IO_IDE_INTRQ
SDCARD_CTRL_BUS
F_SD_CLK
F_SD_CMD
F_SD_DAT0
F_SD_DAT1
F_SD_DAT2
F_SD_DAT3
F_SD_WP
F_SD_CD
Place those resistor close to the SDCard connector
The deal is to limit the lenght of the stubs.
Those ought to be installed when the SDCard Controller will be integrated in the FPGA
And that the CH376 won't be necessary
CLK_14_318_TRINITY
SYS_RESET
JOY2_POTX
JOY2_POTY
JOY3_POTX
JOY3_POTY
C235 10uF
C236 0.1u
C234 0.1u
C238 0.1u
C240 0.1u
TRINITY
CFP9301
U45
XC9572XL-10VQG64C
SD_INT
Mount if UNITY is not installed
CPLD_IDE_TDI
R96
0R
CPLD_TDO
CPLD_TMS
CPLD_TCK
CN1
B6B-ZR(LF)(SN)
C243 0.1u
J10
J11
J12
J13
5747840-4
SHIELD
SH1
SH2
U41
U42
U43
U44
TXS0101DBVR
VA
VB
A
B
OE
C237 0.1u
C239 0.1u
C241 0.1u
C242 0.1u
R95 1K00
R97 1K00
RN5
A09-472JP
S1
ADE0804
BOOT_MODE0
BOOT_MODE1
USER2
USER1
USER0
HI-RES_ON_OFF
GAMMA_ON_OFF
HD_INSTALLED
{BOOT_MODE1, BOOT_MODE0}:
OFF, OFF = Boot On BASIC
OFF, ON = Boot From SDCard
ON, OFF = Boot From Floppy (if Present)
ON, ON = Boot From HD (If Present)
{MEM_SIZE1, MEM_SIZE0}: (Code Memory)
OFF, OFF = 1M (1x Chip 1M x 8)
OFF, ON = 2M (2x Chip 1M x 8)
ON, OFF = 2M (1x Chip 2M x 8)
ON, ON = 4M (2 x Chip 2M x 8)
THE C256 FOENIX PROJECT
Project
C256 Foenix - FMX
Page Title
SDCARD / JOYSTICKS
Schematic
C256F_Schematic_P9.SchDoc
Drawn By:
Stefany Allaire
Checked By:
Stefany Allaire
Date:
March 2020
Modified:
19/03/2020
Rev:
C4B
Sheet
9 of 14
Drawing No:
911936919-C4B

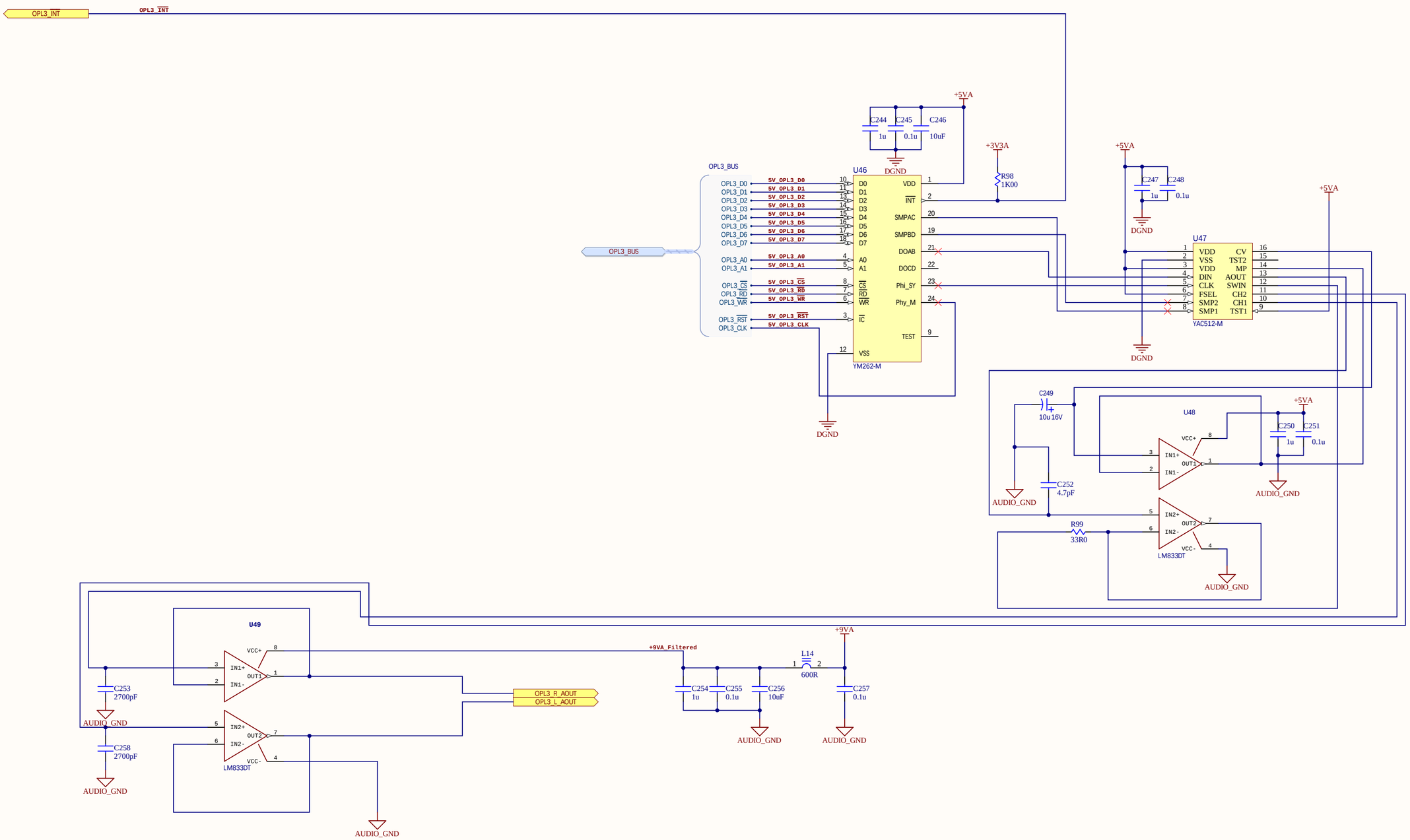

Project	C256 Foenix - FMX
Page Title	OPL3
Schematic	C256F_Schematic_P10.SchDoc
Drawn By:	Stefany Allaire
Date: March 2020	Rev: C4B
Checked By:	Stefany Allaire
Modified: 19/03/2020	Sheet 10 of 14
Drawing No:	911936919-C4B

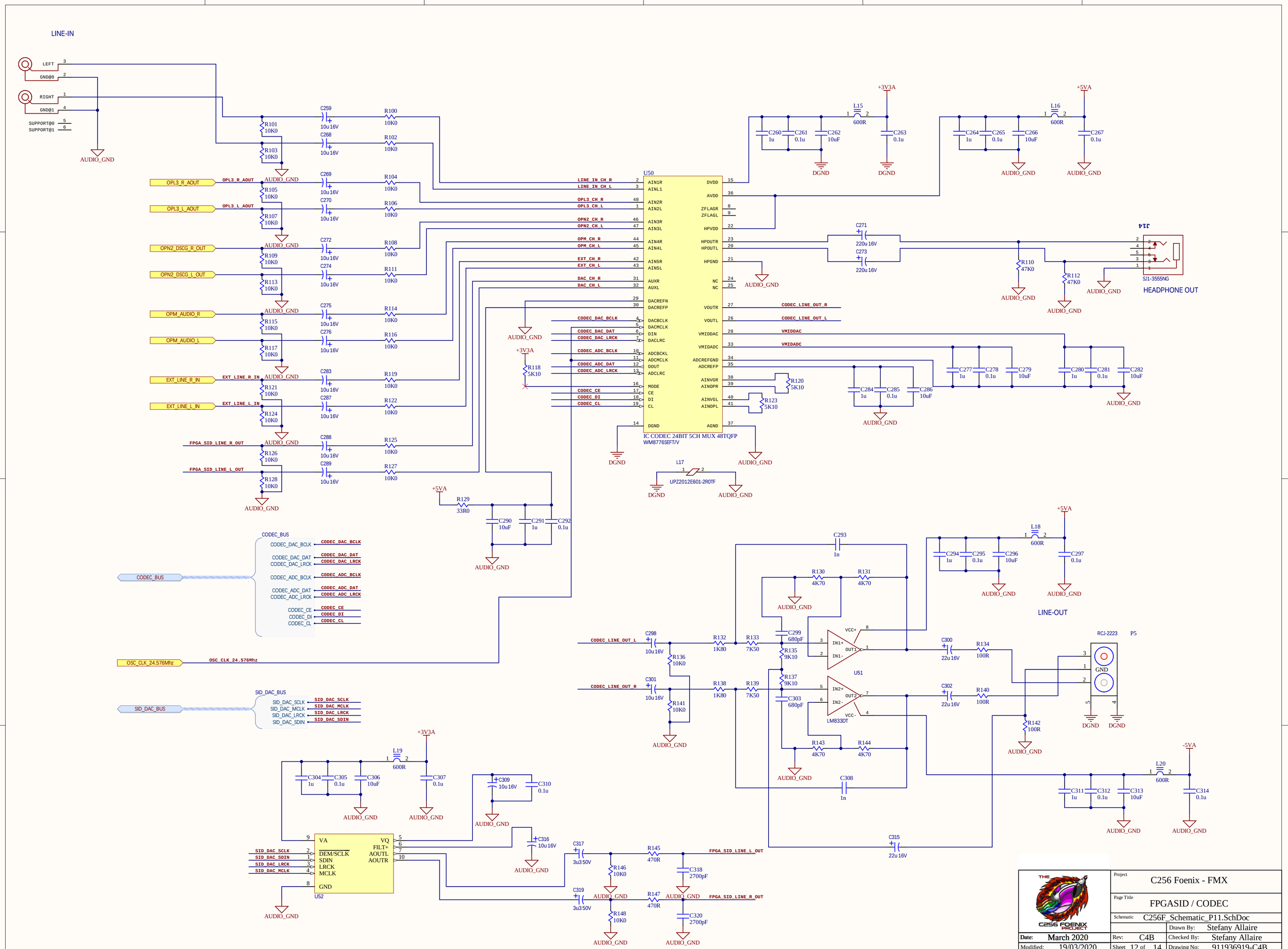

Project	C256 Foenix - FMX
Page Title	FPGASID / CODEC
Schematic	C256F_Schematic_P11.SchDoc
Drawn By:	Stefany Allaire
Date: March 2020	Rev: C4B
Checked By:	Stefany Allaire
Modified: 19/03/2020	Sheet 12 of 14
Drawing No:	911936919-C4B

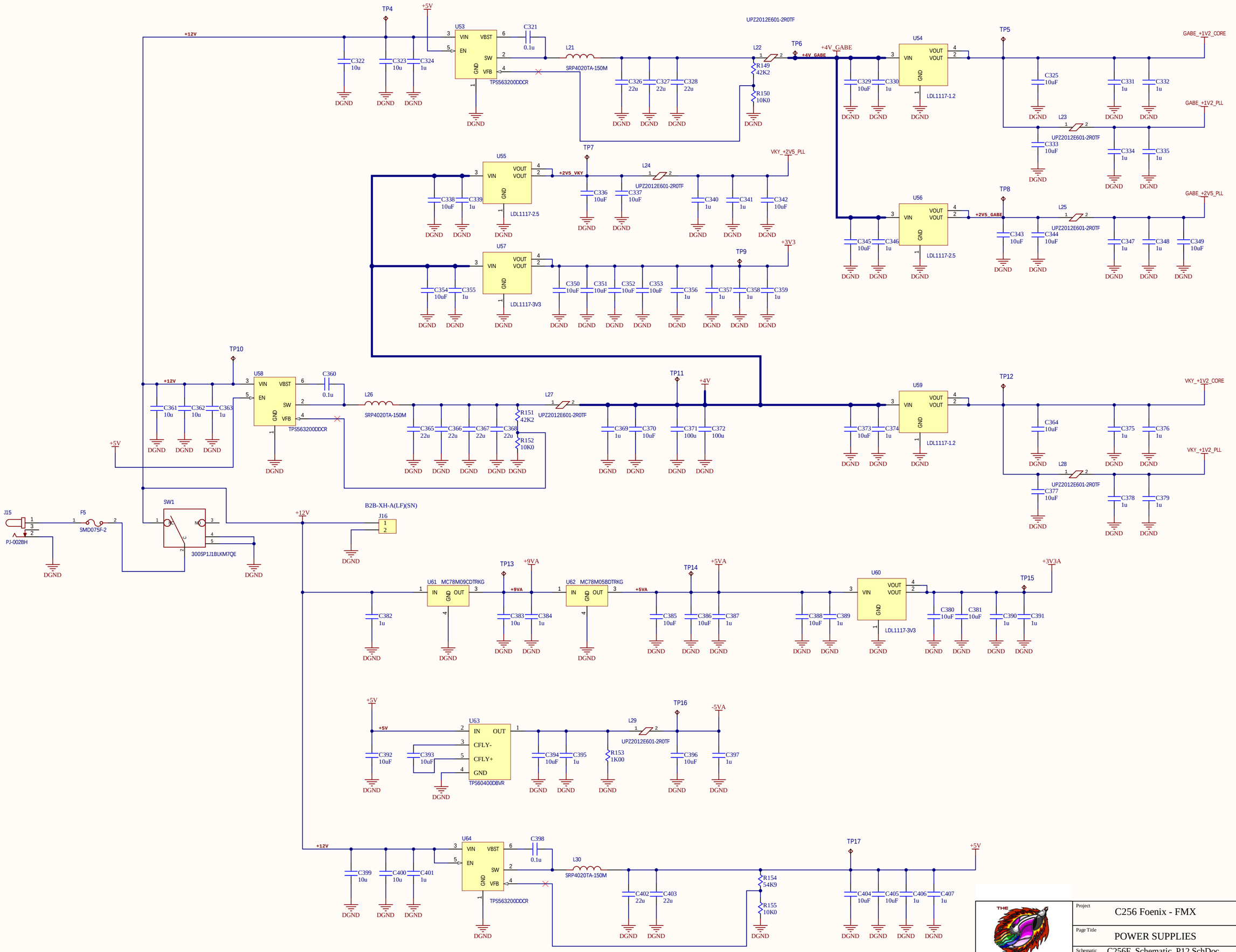

Project	C256 Foenix - FMX
Page Title	POWER SUPPLIES
Schematic	C256F_Schematic_P12.SchDoc
Drawn By:	Stefany Allaire
Checked By:	Stefany Allaire
Date: March 2020	Rev: C4B
Modified: 19/03/2020	Sheet 13 of 14
	Drawing No: 911936919-C4B

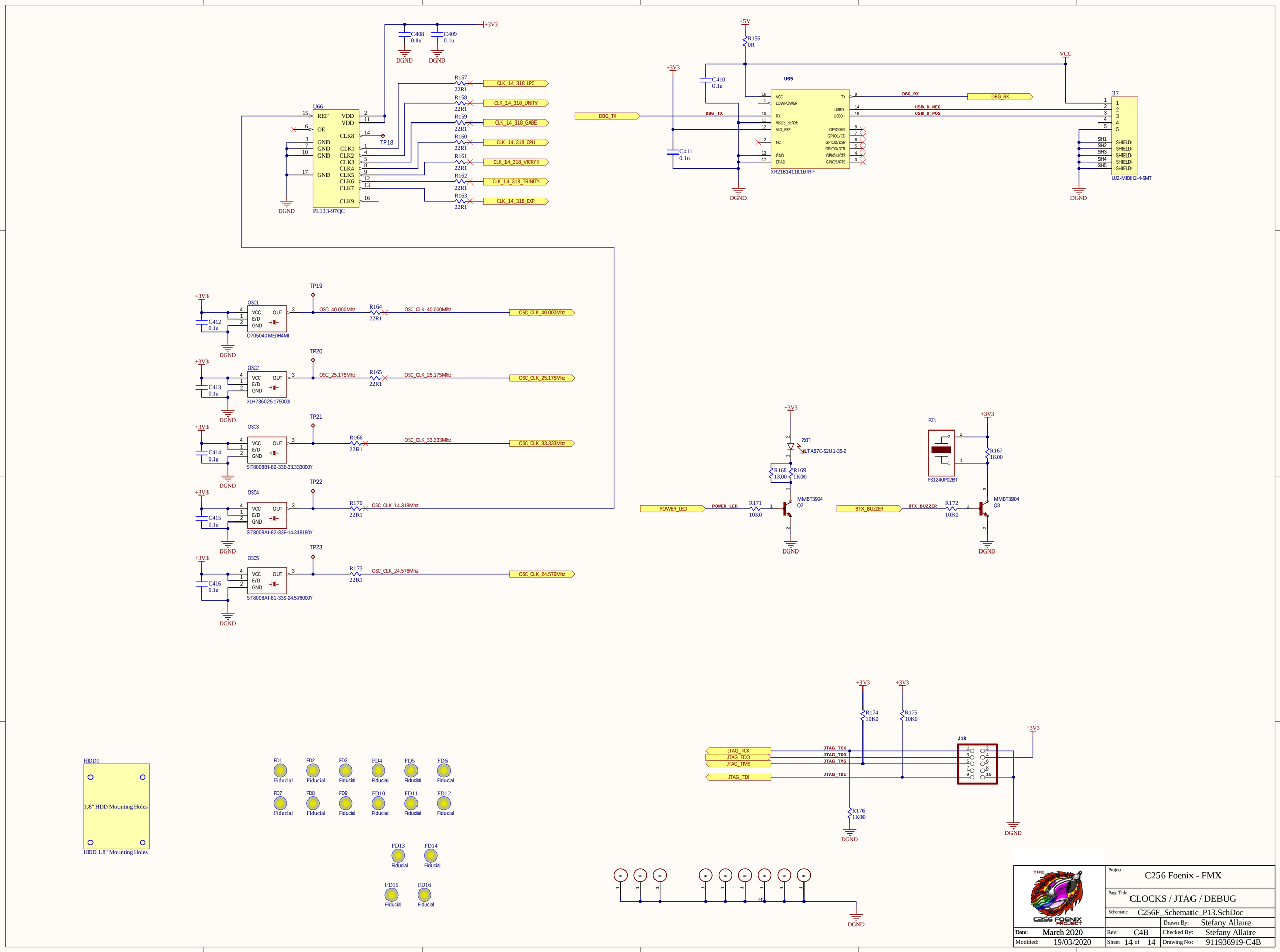

Project	C256 Foenix - FMX
Page Title	CLOCKS / JTAG / DEBUG
Schematic	C256F_Schematic_P13.SchDoc
Drawn By:	Stefany Allaire
Checked By:	Stefany Allaire
Date:	March 2020
Rev:	C4B
Modified:	19/03/2020
Sheet	14 of 14
Drawing No:	911936919-C4B

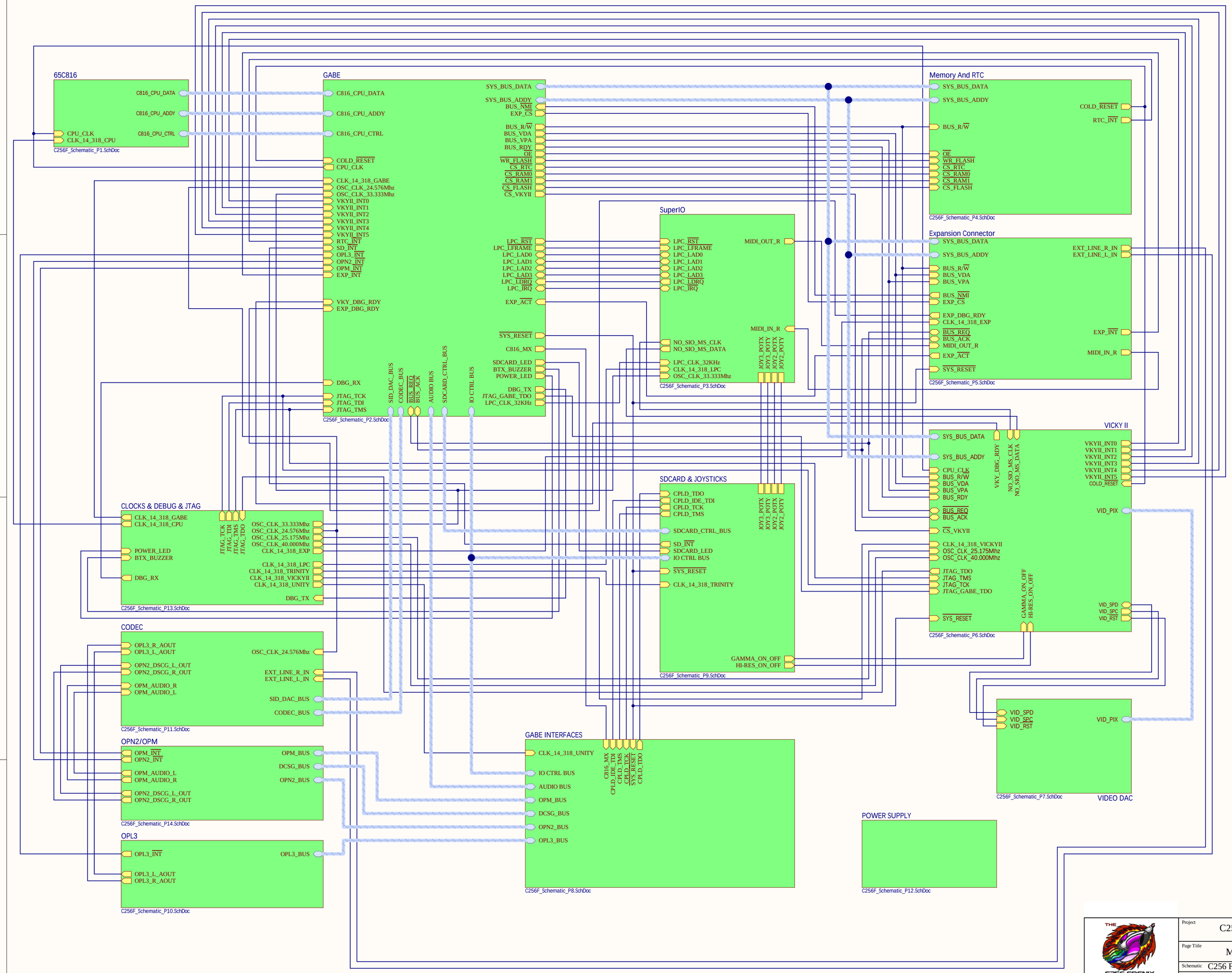

THE C256 FOENIX PROJECT	Project	C256 Foenix - FMX	
	Page Title	MASTER PAGE	
	Schematic	C256 Foenix Master Page.SchDoc	
		Drawn By:	Stefany Allaire
Date: March 2020	Rev: C4B	Checked By:	Stefany Allaire
Modified: 19/03/2020	Sheet - of -	Drawing No:	911936919-C4B

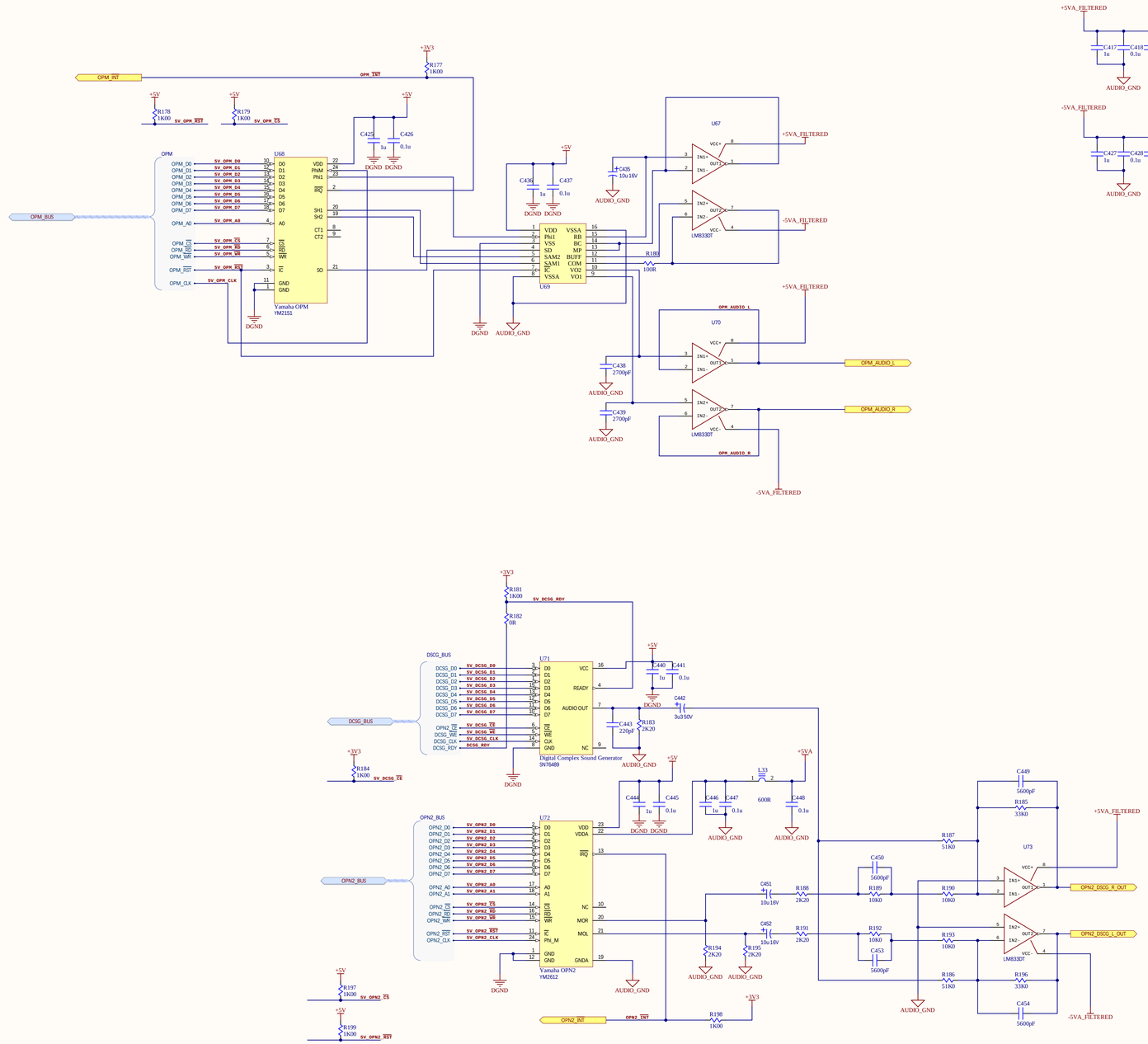

Date: *	Rev: *	Project	
Modified: 03/12/2019	Sheet * of *	Page Title	*
		Schematic:	C256F_Schematic_P14.SchDoc
		Drawn By:	*
		Checked By:	*
		Drawing No:	*