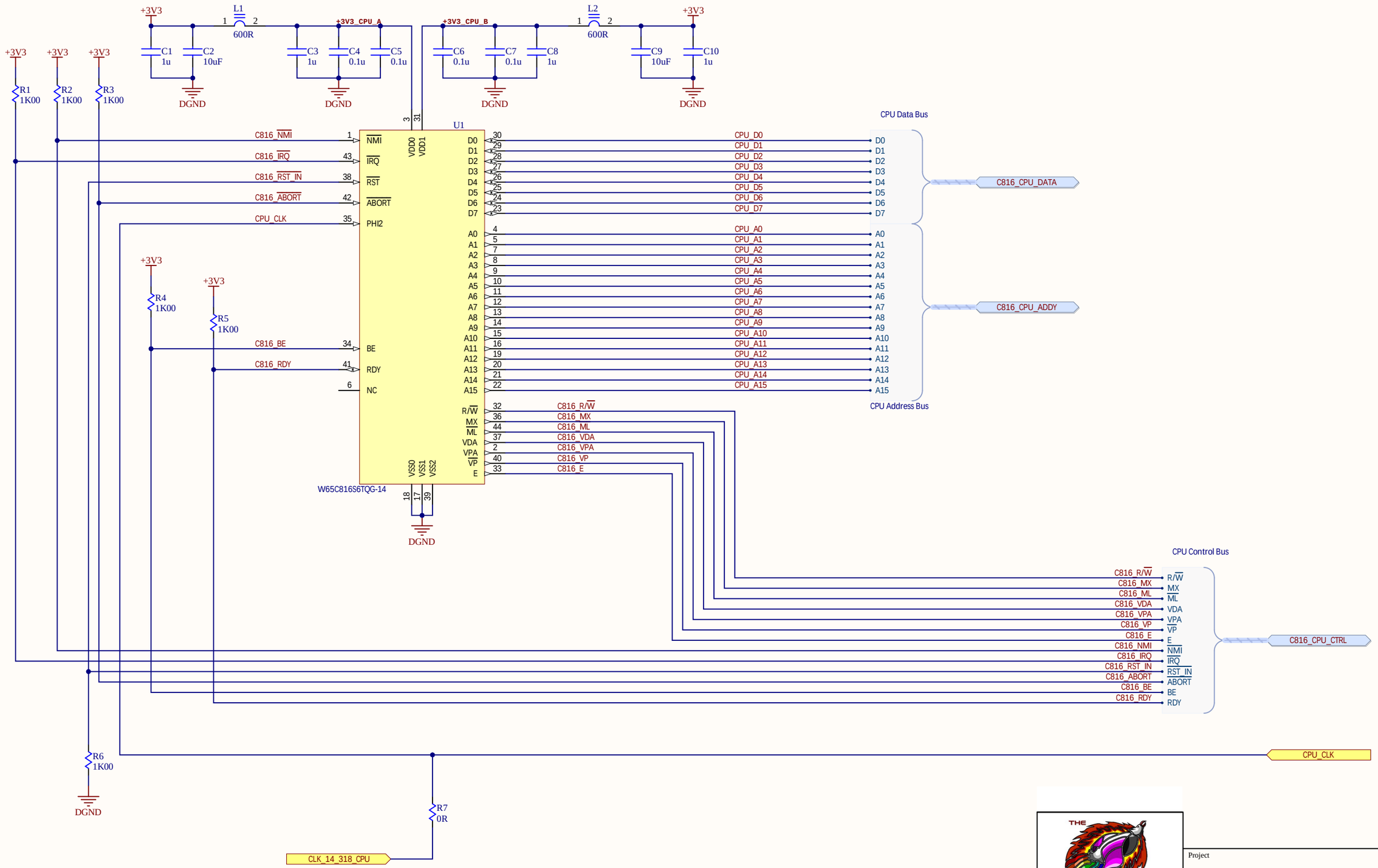

Project			
Schematic	C256F_Schematic_P1.SchDoc		
		Drawn By:	Stefany Allaire
Date: October 2019	Rev: C4A	Checked By:	Stefany Allaire
Modified: 24/03/2021	Sheet 1 of 14	Drawing No:	911936919-C4A

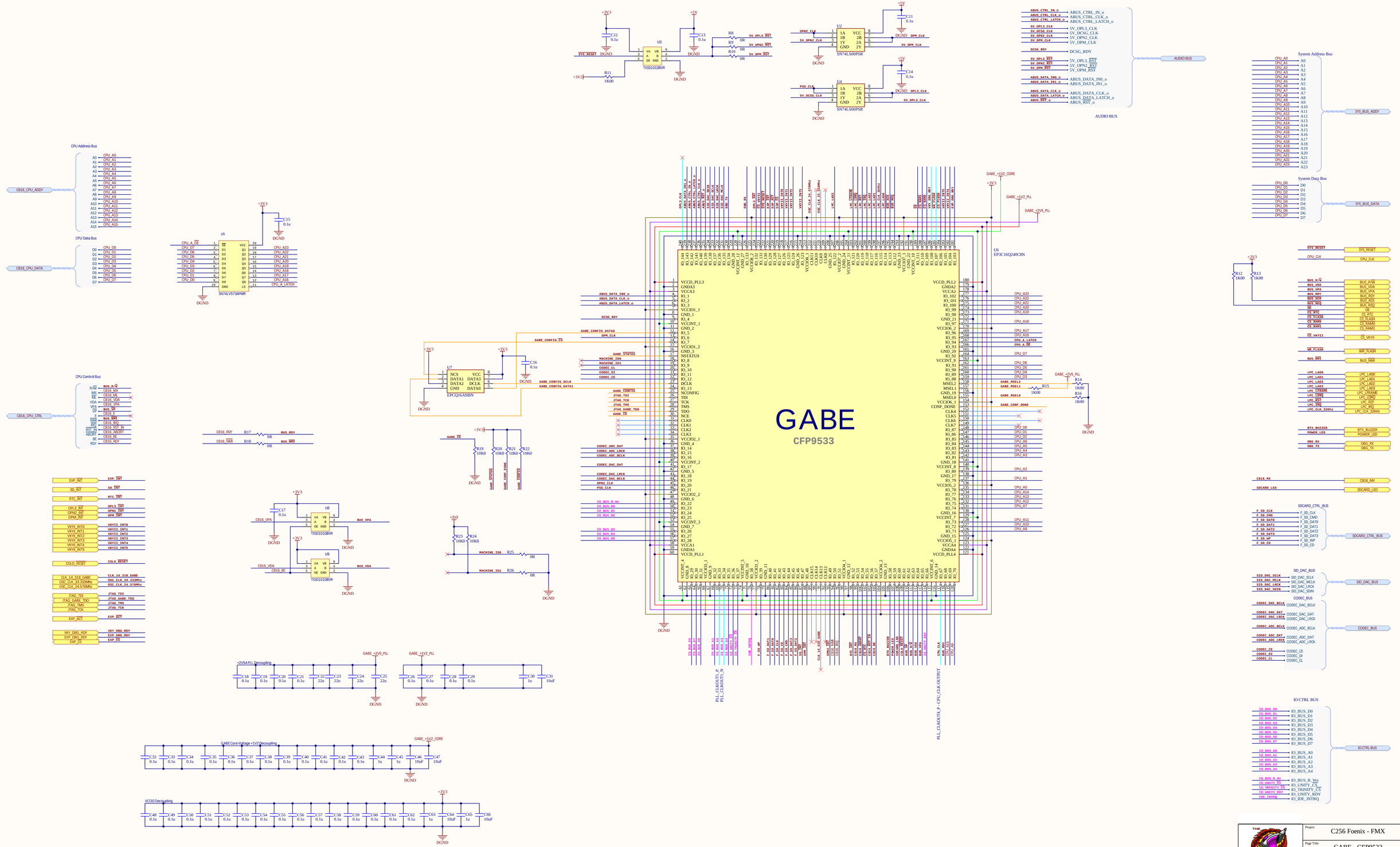

Project	C256 Foenix - FMX
Page Title	GABE - CFP9533
Schematic	C256F_Schematic_P2.SchDoc
Drawn By:	Stefany Allaire
Date: October 2019	Rev: C4A
Checked By:	Stefany Allaire
Modified: 24/03/2021	Sheet 2 of 14
Drawing No:	911936919-C4A

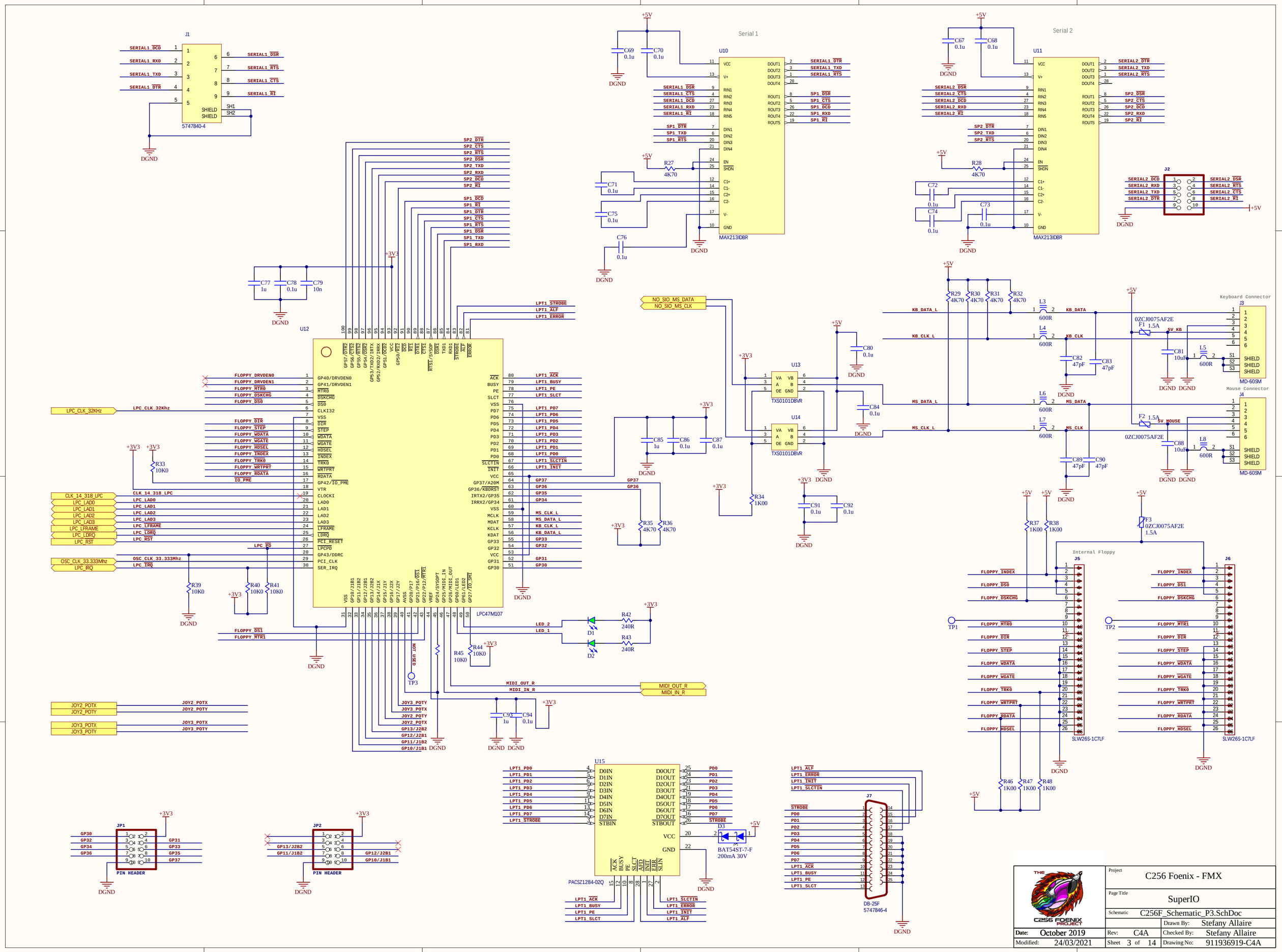
J1
5747840-4
Serial 1
U10
MAX213IDBR
Serial 2
U11
MAX213IDBR
J2
U12
LPC47M107
U13
TXS0101DBVR
U14
TXS0101DBVR
Keyboard Connector
J3
MD-60SM
Mouse Connector
J4
MD-60SM
Internal Floppy
J5
SLW26S-1C7LF
J6
SLW26S-1C7LF
U15
PACSZ1284-02Q
D3
BAT54ST-7-F
200mA 30V
J7
DB-25F
5747846-4
JP1
PIN HEADER
JP2
PIN HEADER
Project
C256 Foenix - FMX
Page Title
SuperIO
Schematic
C256F_Schematic_P3.SchDoc
Drawn By:
Stefany Allaire
Date:
October 2019
Rev:
C4A
Checked By:
Stefany Allaire
Modified:
24/03/2021
Sheet
3 of 14
Drawing No:
911936919-C4A

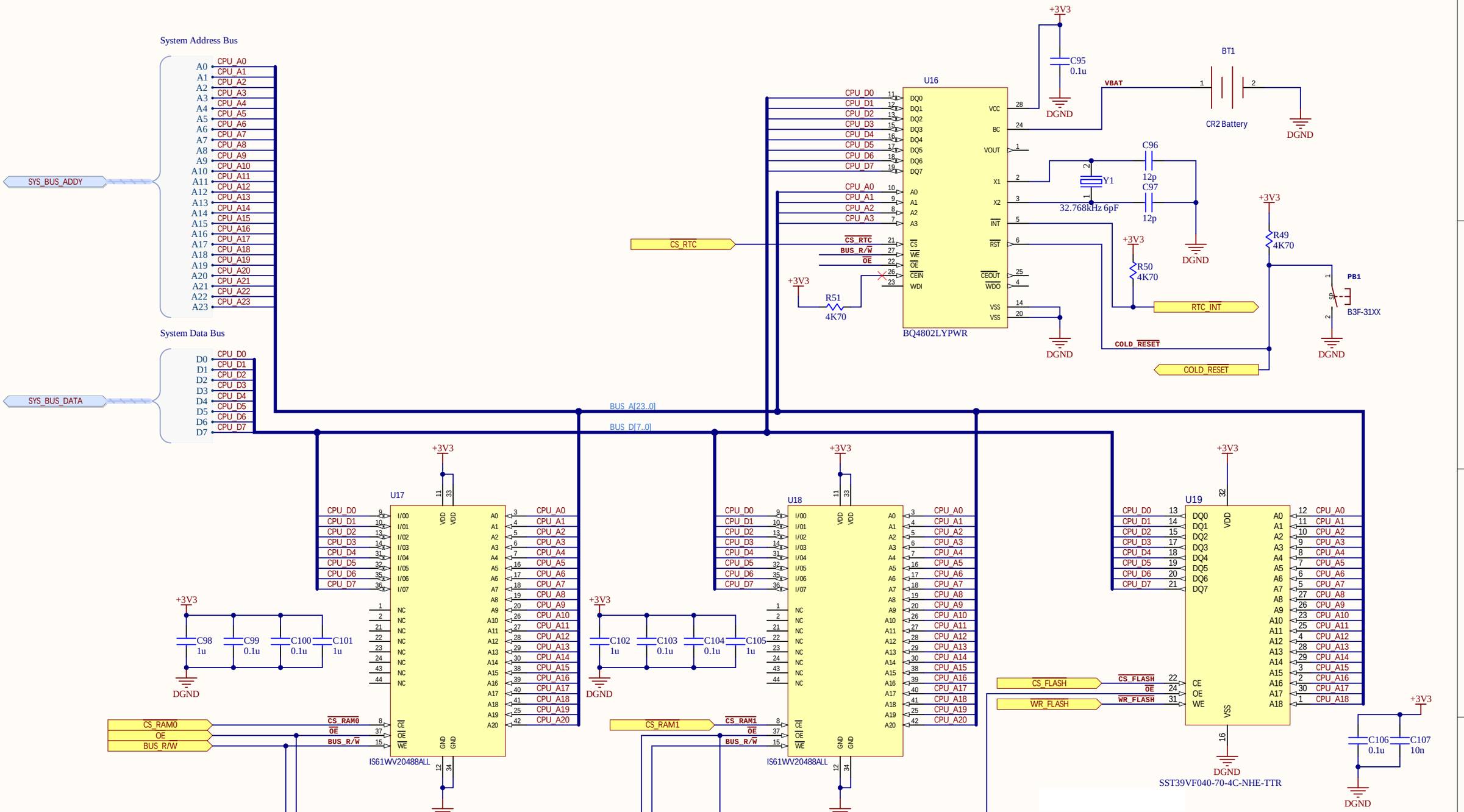

Project	C256 Foenix - FMX
Page Title	MEMORIES & RTC
Schematic	C256F_Schematic_P4.SchDoc
Drawn By:	Stefany Allaire
Date: October 2019	Rev: C4A
Checked By:	Stefany Allaire
Modified: 24/03/2021	Sheet 4 of 14
Drawing No:	911936919-C4A

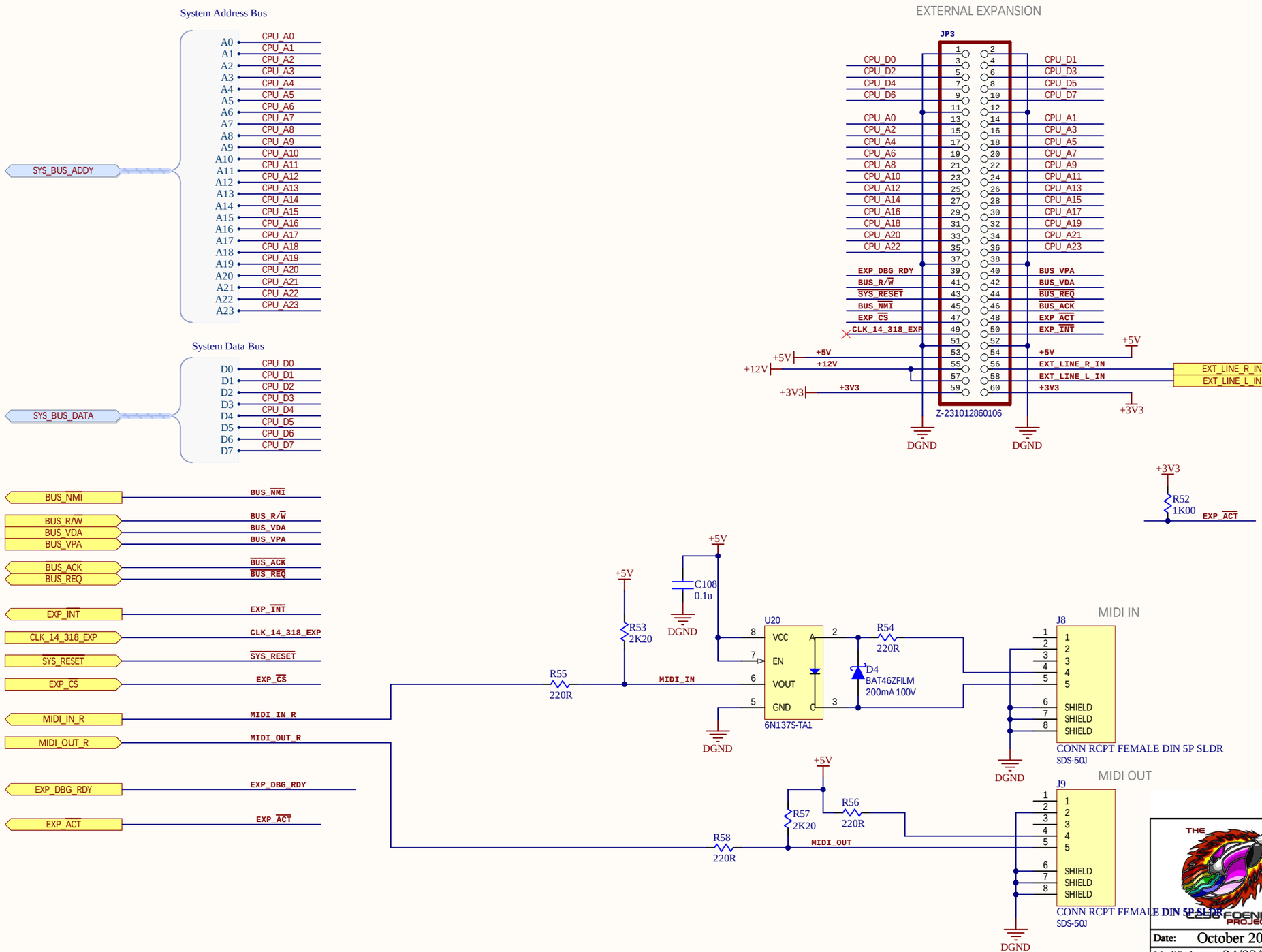

Project	C256 Foenix - FMX		
Page Title	EXPANSION BUS / MIDI		
Schematic	C256F_Schematic_P5.SchDoc		
		Drawn By:	Stefany Allaire
Date: October 2019	Rev: C4A	Checked By:	Stefany Allaire
Modified: 24/03/2021	Sheet 5 of 14	Drawing No:	911936919-C4A

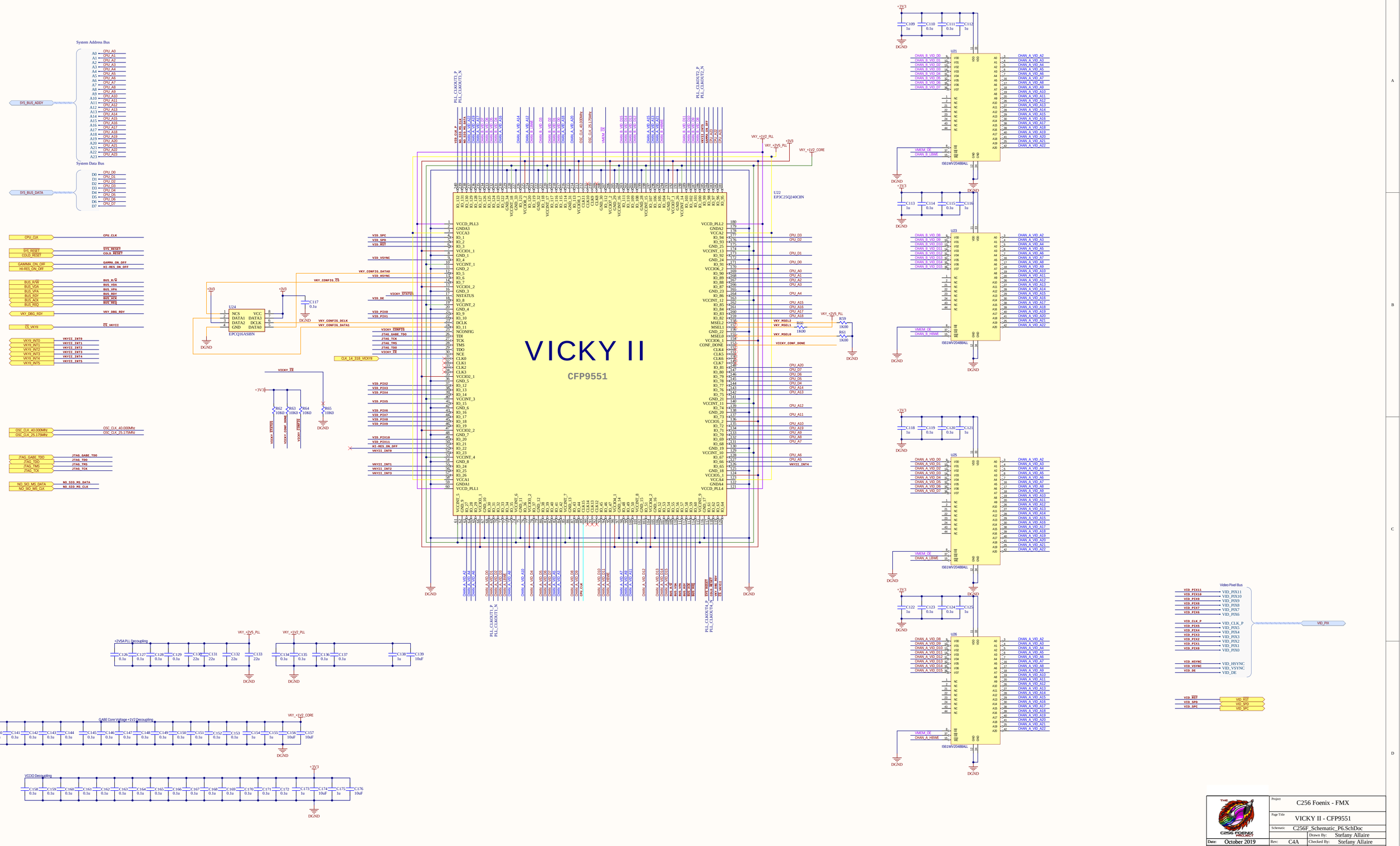

Project	C256 Foenix - FMX
Page Title	VICKY II - CFP9551
Schematic	C256F_Schematic_P6.SchDoc
Date: October 2019	Drawn By: Stefany Allaire
Modified: 24/03/2021	Rev: C4A
	Checked By: Stefany Allaire
	Sheet 6 of 14
	Drawing No: 911936919-C4A

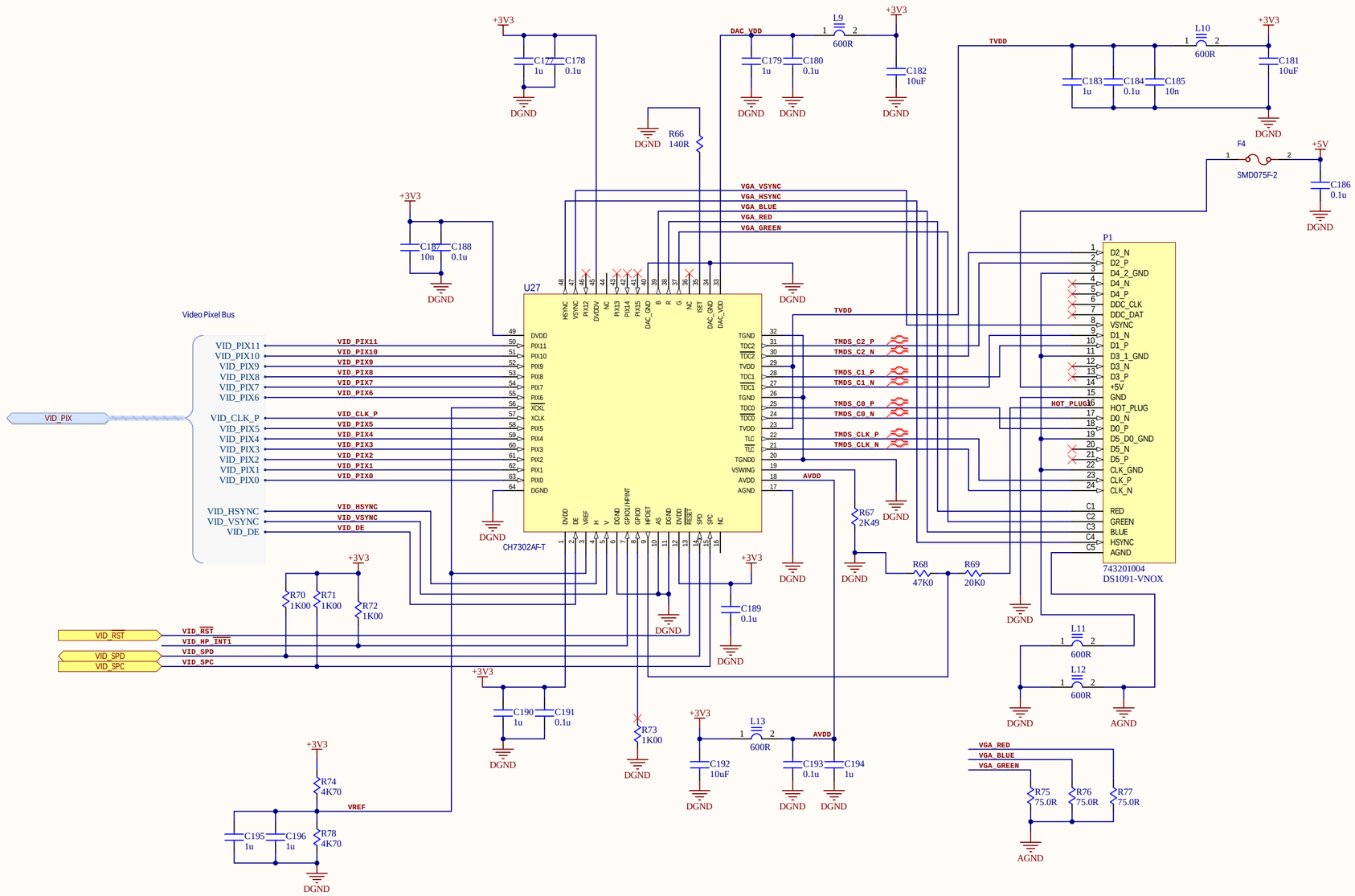

Project	C256 Foenix - FMX		
Page Title	VIDEO DAC		
Schematic	C256F_Schematic_P7.SchDoc		
		Drawn By:	Stefany Allaire
Date: September 2019	Rev: C4A	Checked By:	Stefany Allaire
Modified: 24/03/2021	Sheet 7 of 14	Drawing No:	911936919-C4A

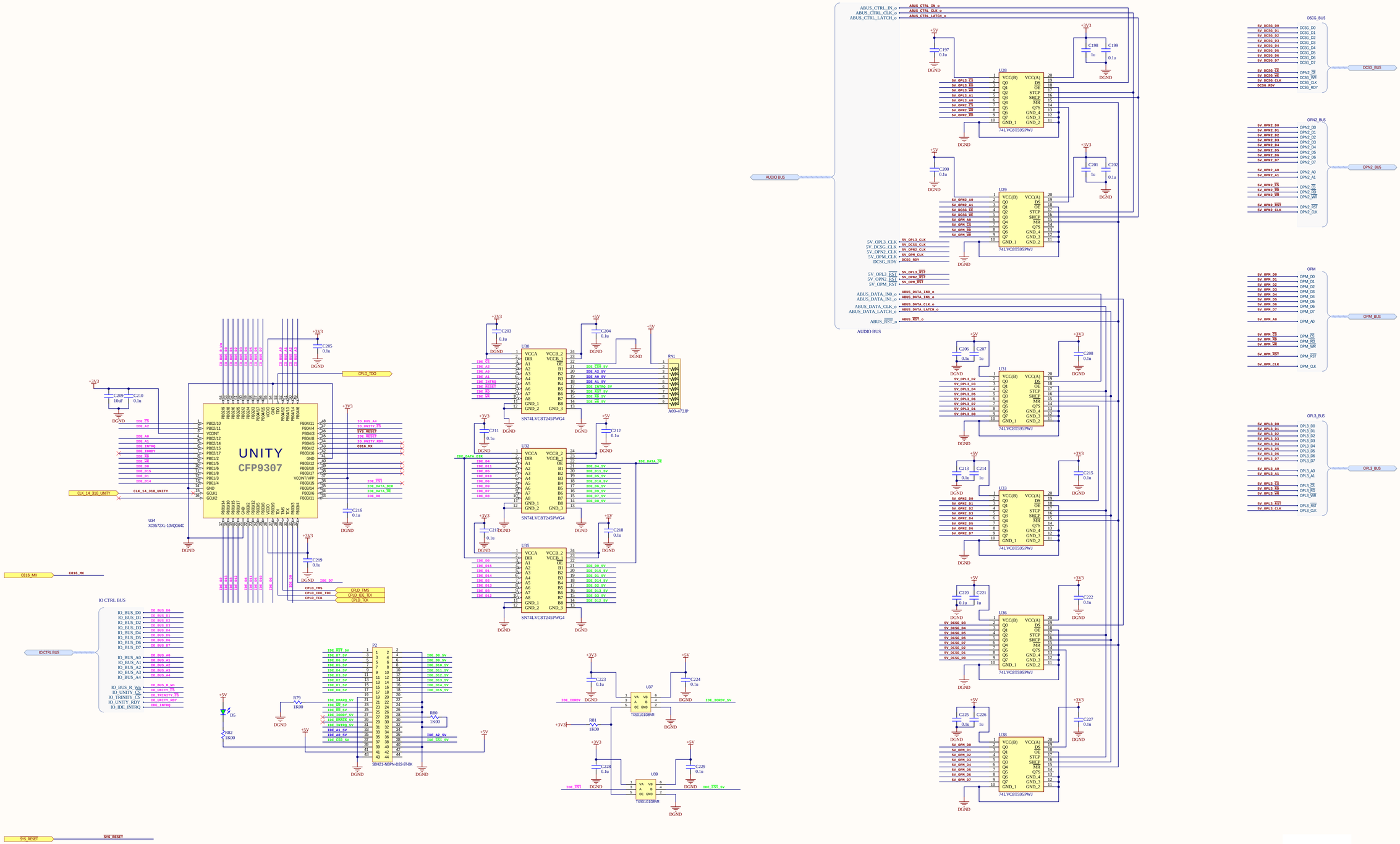

Project	C256 Foenix - FMX
Page Title	GABE INTERFACES
Schematic:	C256F_Schematic_P8.SchDoc
Date: October 2019	Drawn By: Stefany Allaire
Modified: 24/03/2021	Rev: C4A · Checked By: Stefany Allaire · Sheet 8 of 14 · Drawing No: 911936919-C4A

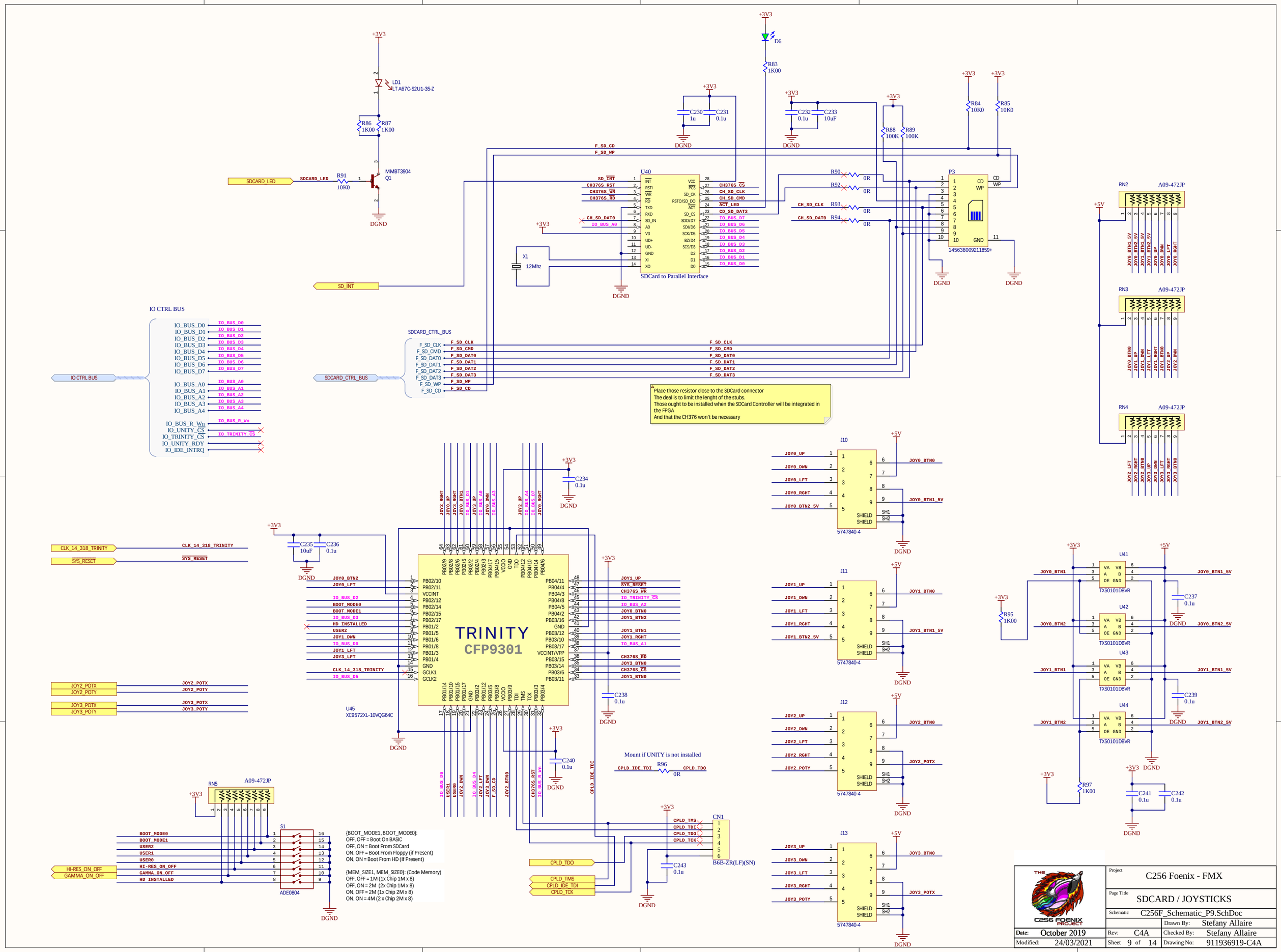
SDCARD / JOYSTICKS
U40
SDCard to Parallel Interface
P3
145638009211859+
U45
XC9572XL-10VQG64C
TRINITY
CFP9301
J10
J11
J12
J13
5747840-4
U41
U42
U43
U44
TXS0101DBVR
RN2
RN3
RN4
RN5
A09-472JP
CN1
B6B-ZR(LF)(SN)
S1
ADE0804
IO CTRL BUS
SDCARD_CTRL_BUS
Place those resistor close to the SDCard connector
The deal is to limit the lenght of the stubs.
Those ought to be installed when the SDCard Controller will be integrated in the FPGA
And that the CH376 won't be necessary
Mount if UNITY is not installed
{BOOT_MODE1, BOOT_MODE0}:
OFF, OFF = Boot On BASIC
OFF, ON = Boot From SDCard
ON, OFF = Boot From Floppy (if Present)
ON, ON = Boot From HD (If Present)
{MEM_SIZE1, MEM_SIZE0}: (Code Memory)
OFF, OFF = 1M (1x Chip 1M x 8)
OFF, ON = 2M (2x Chip 1M x 8)
ON, OFF = 2M (1x Chip 2M x 8)
ON, ON = 4M (2 x Chip 2M x 8)
Project
C256 Foenix - FMX
Page Title
SDCARD / JOYSTICKS
Schematic
C256F_Schematic_P9.SchDoc
Drawn By:
Stefany Allaire
Checked By:
Stefany Allaire
Date:
October 2019
Modified:
24/03/2021
Rev:
C4A
Sheet
9 of 14
Drawing No:
911936919-C4A

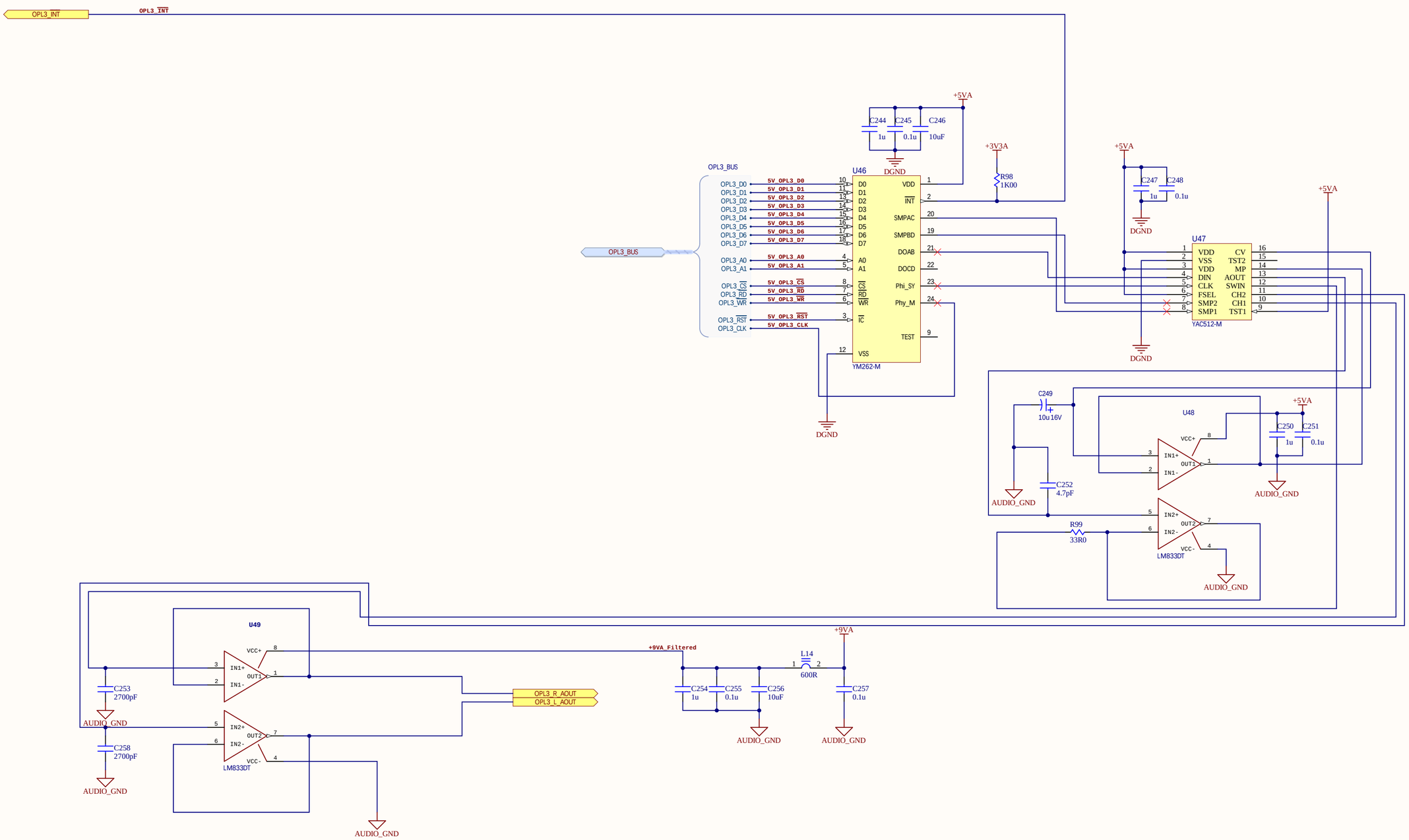

Project	C256 Foenix - FMX	
Page Title	OPL3	
Schematic	C256F_Schematic_P10.SchDoc	
		Drawn By: Stefany Allaire
Date: October 2019	Rev: C4A	Checked By: Stefany Allaire
Modified: 24/03/2021	Sheet 10 of 14	Drawing No: 911936919-C4A

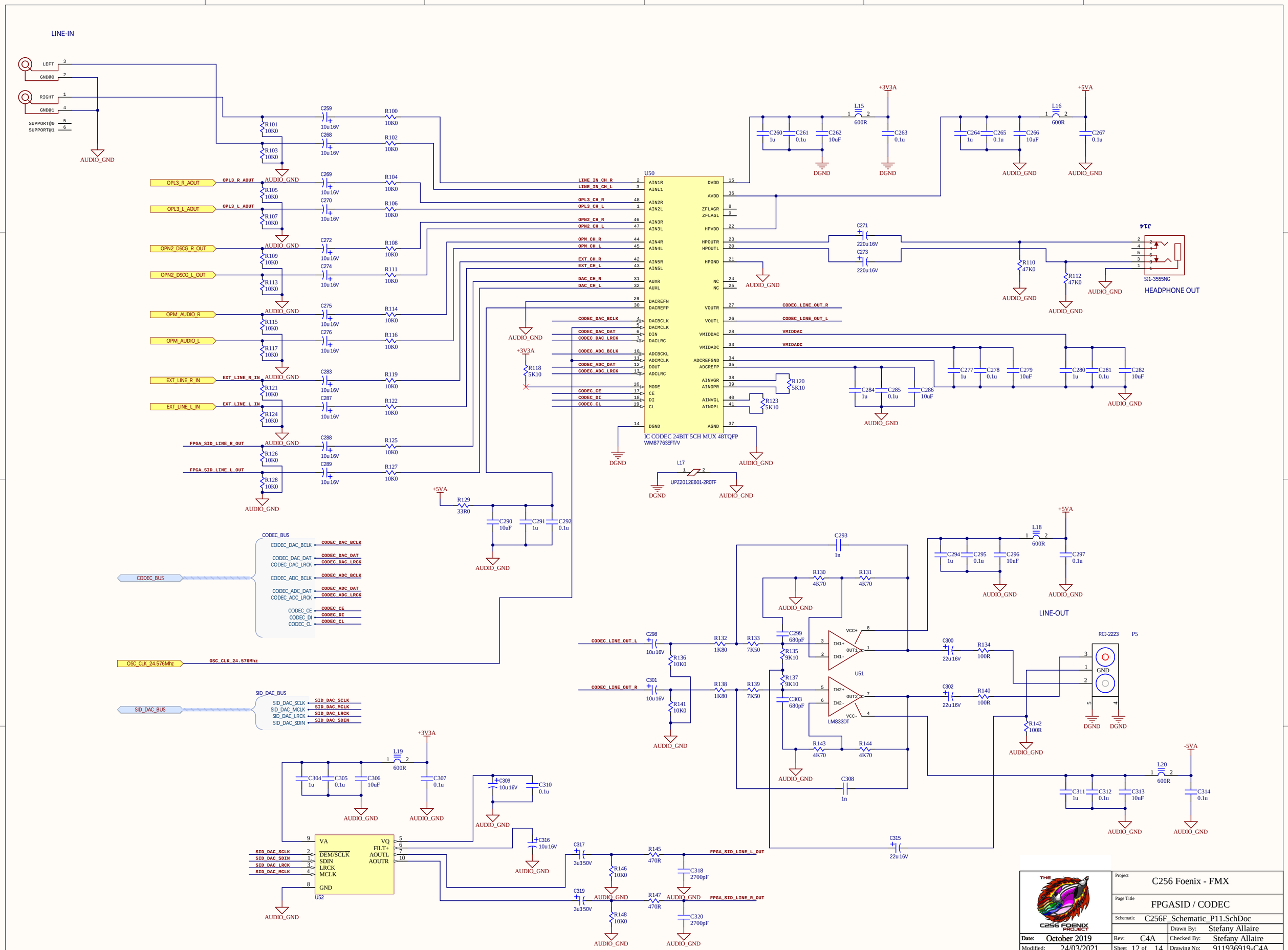

Project	C256 Foenix - FMX
Page Title	FPGASID / CODEC
Schematic	C256F_Schematic_P11.SchDoc
Drawn By:	Stefany Allaire
Date: October 2019	Rev: C4A
Checked By:	Stefany Allaire
Modified: 24/03/2021	Sheet 12 of 14
Drawing No:	911936919-C4A

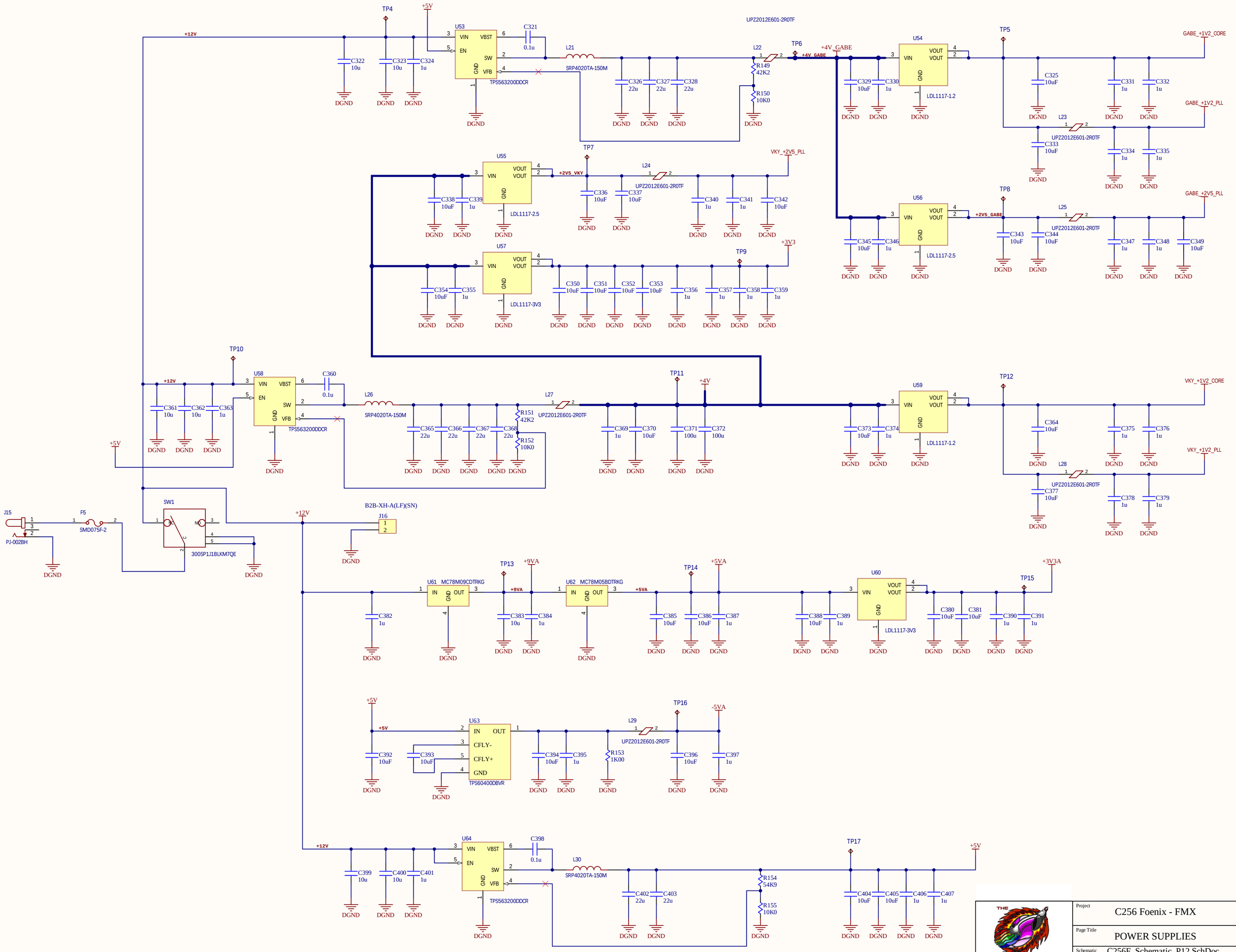

Project	C256 Foenix - FMX
Page Title	POWER SUPPLIES
Schematic	C256F_Schematic_P12.SchDoc
Drawn By:	Stefany Allaire
Date: October 2019	Rev: C4A
Checked By:	Stefany Allaire
Modified: 24/03/2021	Sheet 13 of 14
Drawing No:	911936919-C4A

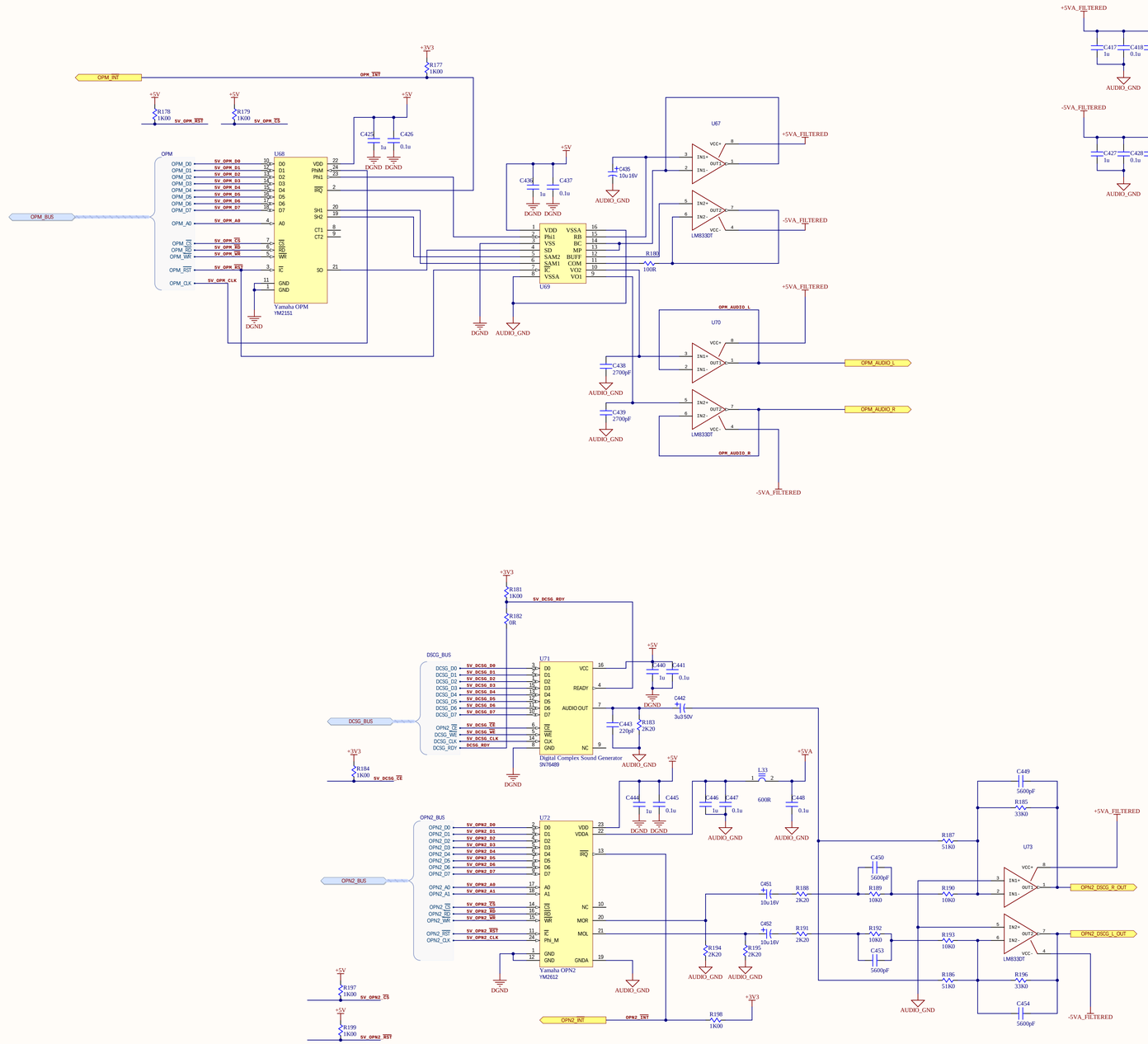

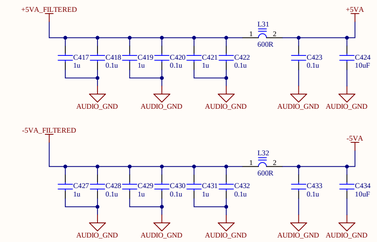

Project	C256 Foenix - FMX		
Page Title	*		
Schematic:	C256F_Schematic_P14.SchDoc		
		Drawn By:	Stefany Allaire
Date: October 2019	Rev: C4A	Checked By:	Stefany Allaire
Modified: 24/03/2021	Sheet 14 of 14	Drawing No:	911936919-C4A

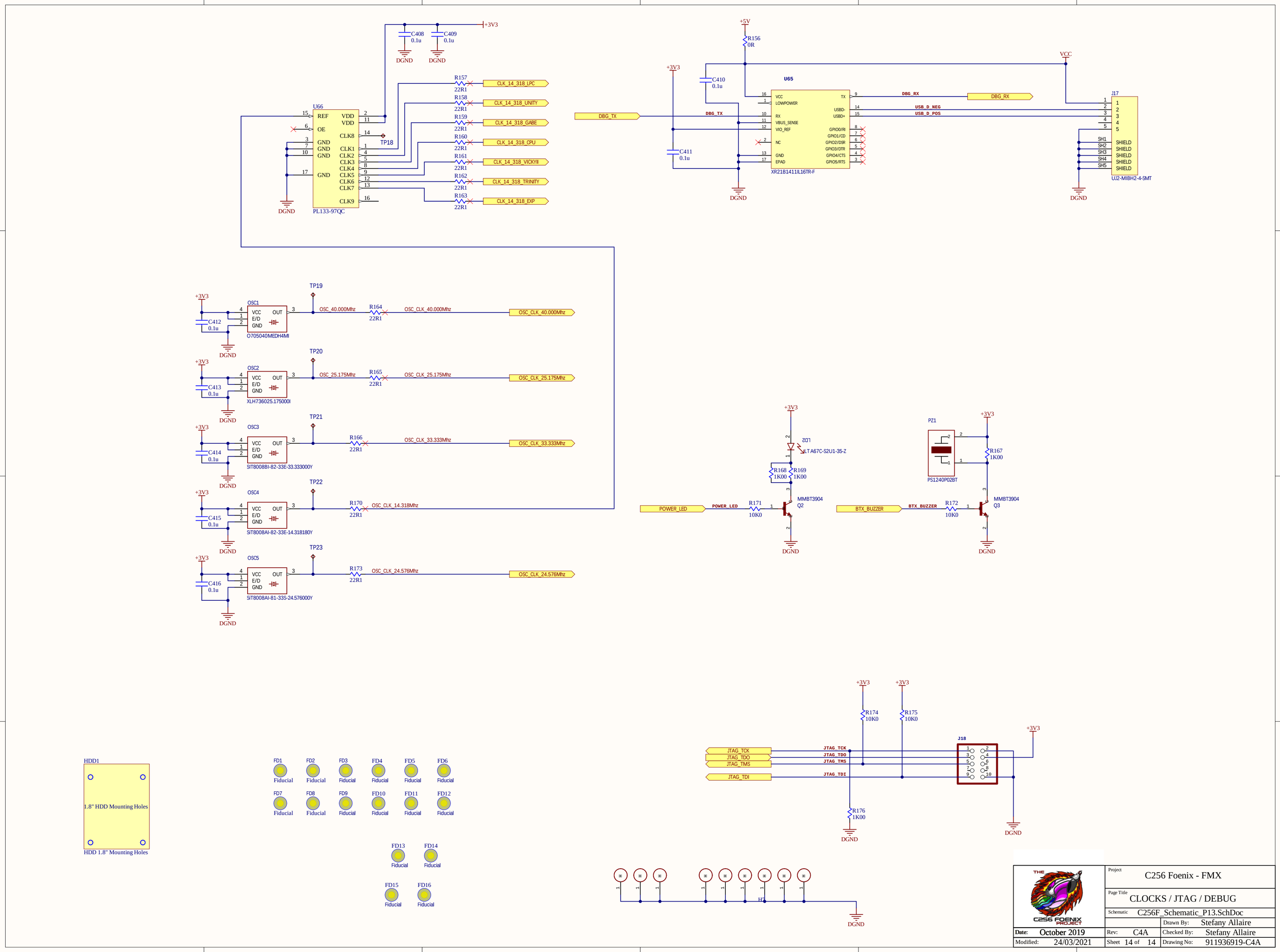

Project	C256 Foenix - FMX
Page Title	CLOCKS / JTAG / DEBUG
Schematic	C256F_Schematic_P13.SchDoc
Drawn By:	Stefany Allaire
Date: October 2019	Rev: C4A
Checked By:	Stefany Allaire
Modified: 24/03/2021	Sheet 14 of 14
Drawing No:	911936919-C4A

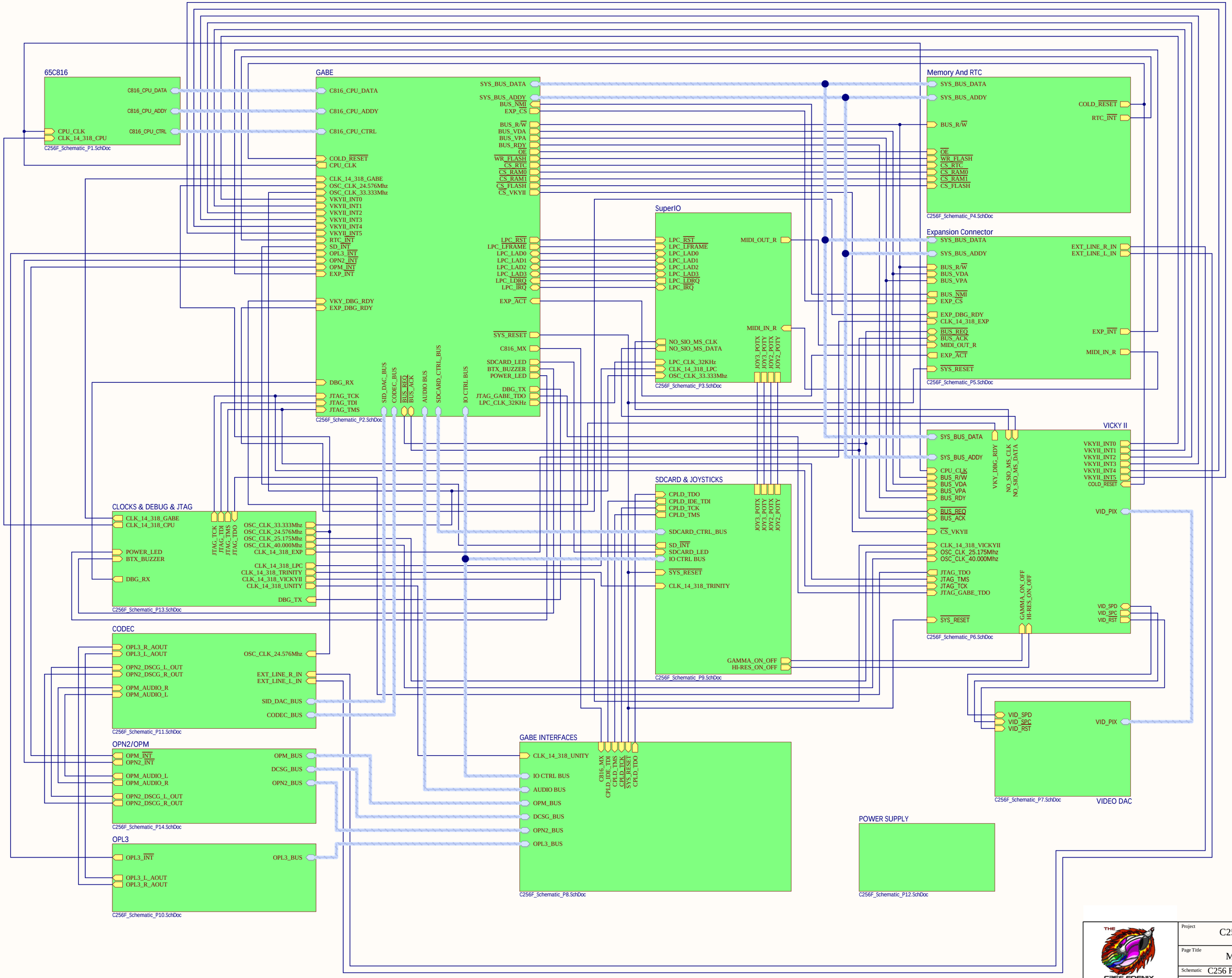

Project	C256 Foenix - FMX	
Page Title	MASTER PAGE	
Schematic	C256 Foenix Master Page.SchDoc	
Date: December 2019	Rev: C4A	Drawn By: Stefany Allaire
Modified: 02/12/2019	Sheet - of -	Checked By: Stefany Allaire
		Drawing No: 911936919-C4A